Edizione 2010
Rev. A

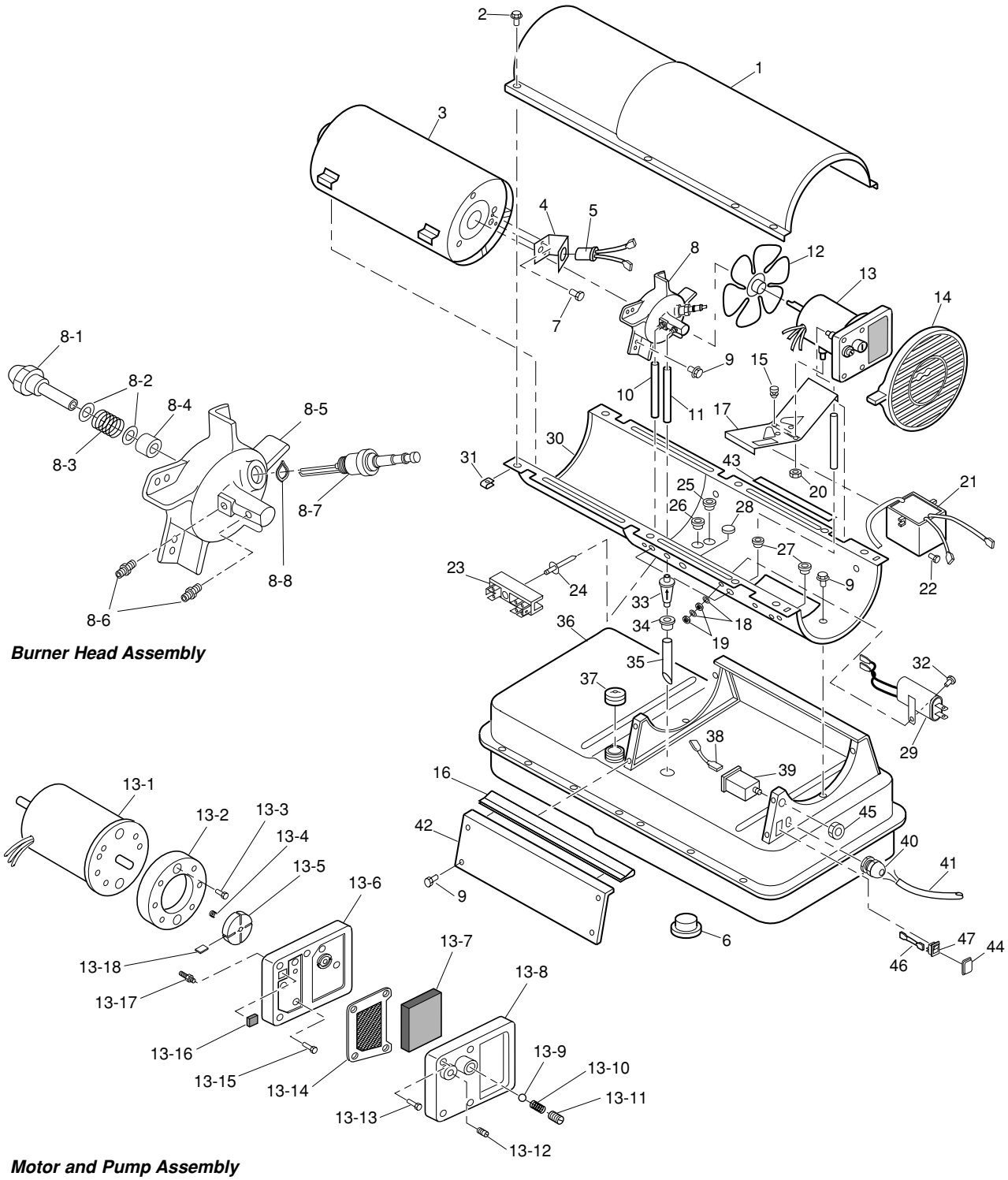

Burner Head Assembly

Motor and Pump Assembly

Key No.	Part Number	Description	Qty.
1	4104.006	Upper Shell	1
2	4109.590	Screw/Lockwasher, 1/2"	8
3	4110.595	Combustion Chamber	1
4	4100.659	Photocell Bracket	1
5	4110.564	Photocell Assembly	1
6	4100.632	Drain Plug	1
7	4103.529	Screw, #6-32 x 3/8"	2
8	**	Burner Head Assembly	1
8-1	4103.898	Nozzle	1
8-2	4100.525	Nozzle Seal Washer	2
8-3	4100.533	Nozzle Seal Spring	1
8-4	4101.622	Nozzle Seal Sleeve	1
8-5	4105.187	Burner Head Body	1
8-6	4104.118	Barb Fitting	2
8-7	4101.846	Spark Plug	1
8-8	4100.526	Wave Spring Washer	1
9	4110.124	Screw/Lockwasher, 1/2"	13
10	4104.156	Air Line	1
11	4110.032	Fuel Line	1
12	4105.062	Fan	1
13	**	Motor and Pump Assembly	1
13-1	4110.080	Motor with capacitor	1
13-2	4101.532	Pump Body	1
13-3	4108.590	Screw, #10-32 x 3/4"	2
13-4	4108.635	Insert	1
13-5	4103.441	Rotor	1
13-6	4101.325	End Pump Cover	1
13-7	4101.358	Intake Filter	1
13-8	4108.643	End Cover	1
13-9	4108.379	Steel Ball (1/4" Dia.)	1
13-10	4102.141	Pressure Relief Spring	1
13-11	4102.133	Adjusting Screw	1
13-12	4102.125	Plug	1
13-13	4108.528	Screw, #10-32 x 1"	4
13-14	4101.341	Output Filter	1
13-15	4108.536	Screw, #10-32 x 1 1/8"	6
13-16	4101.333	Lint Filter	1
13-17	4104.118	Barb Fitting	1
13-18	4101.666	Blade	4
14	4103.695	Fan Guard	1
15	4150.553	Rubber Bumper	2
16	4103.850	Edge Liner	1
17	4110.186	Motor Bracket	1
18	4160.613	Lock Washer, #10	2
19	4110.134	Nut, #10-32	3
20	4108.486	Hex locknut	2
21	4110.609	Electronic Ignitor	1
22	4108.510	Screw, #10-16 x 3/4"	2
23	4106.110	Terminal Board	1
24	4110.571	Rivet	1
25	4101.112	Bushing	1
26	4101.112	Bushing	1
27	4160.646	Bushing	2
28	4110.070	Button Plug	1
29	4105.287	Power Line RFI Filter	1
30	4110.566	Lower Shell	1
31	4104.170	Clip Nut	8
32	4110.133	Screw, #10-32 x 3/4"	1
33	4100.630	Fuel filter	1
34	4100.541	Rubber Bushing	1
35	4110.147	Fuel Line	1
36	4110.149	Fuel Tank	1
37	4103.891	Fuel Tank Cap	1
38	4110.195	Wire Assembly (red)	1
39	4104.196	Flame-Out Control	1
40	4150.528	Strain Relief Bushing	1
41	4110.563	Power Cord	1
42	4110.062	Side Cover	1
43	4110.041	Vinyl Foam Gasket	2
44	4104.336	Switch Cover	1
45	4109.592	Hex Nut	1
46	4110.164	Wire Assembly	2
47	4106.179	ON/OFF Switch	1

PARTS AVAILABLE - NOT SHOWN

	4105.292	Filler Neck Screen	1

** Parts not available as an assembly, order parts separately

B150 CED MODEL 2010

From Serial Number: 30101868

Edizione 2010
Rev. A

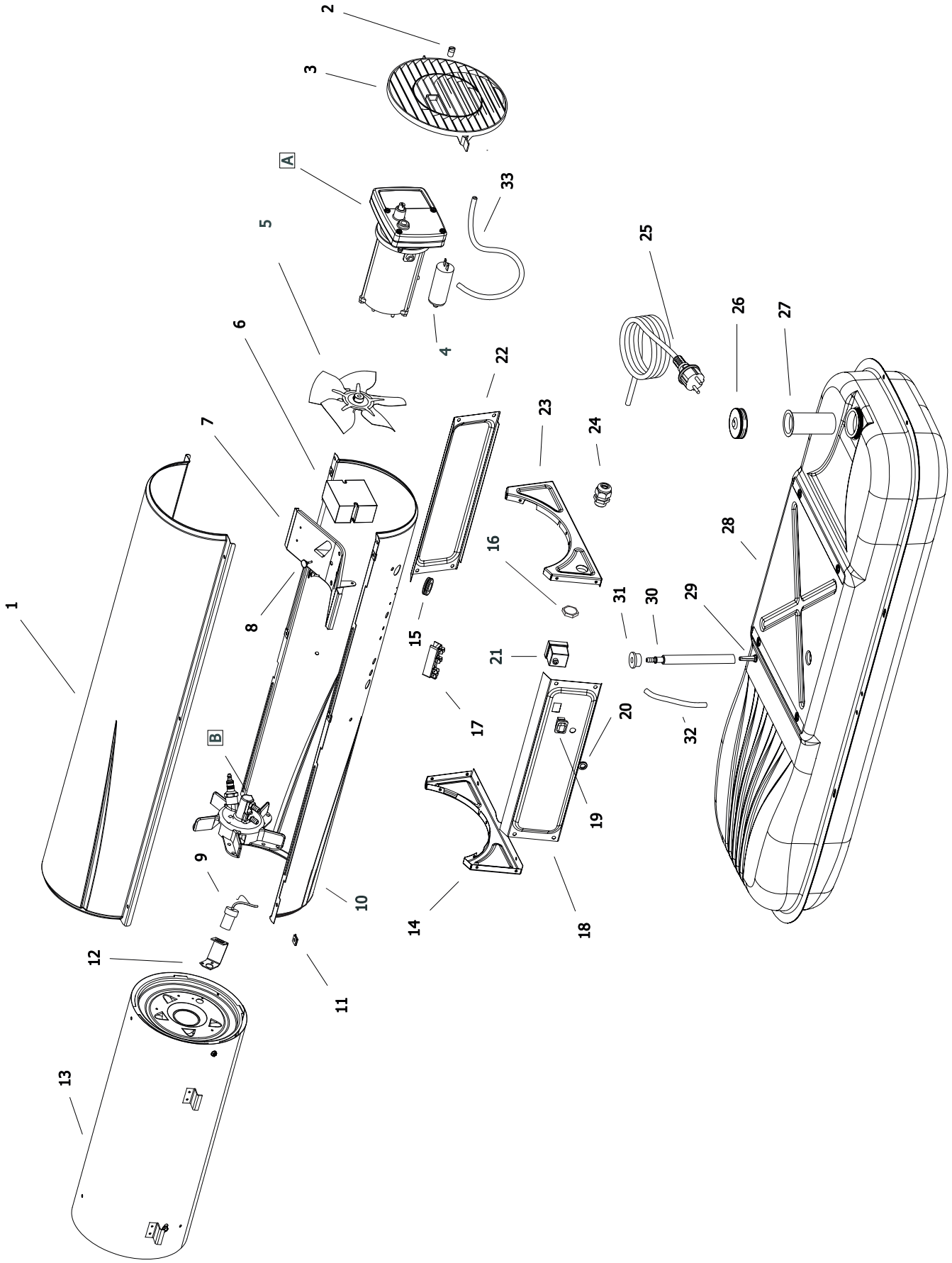

B150 CED MODEL 2010

A

From Serial Number: 30101868

Edizione 2010
Rev. A

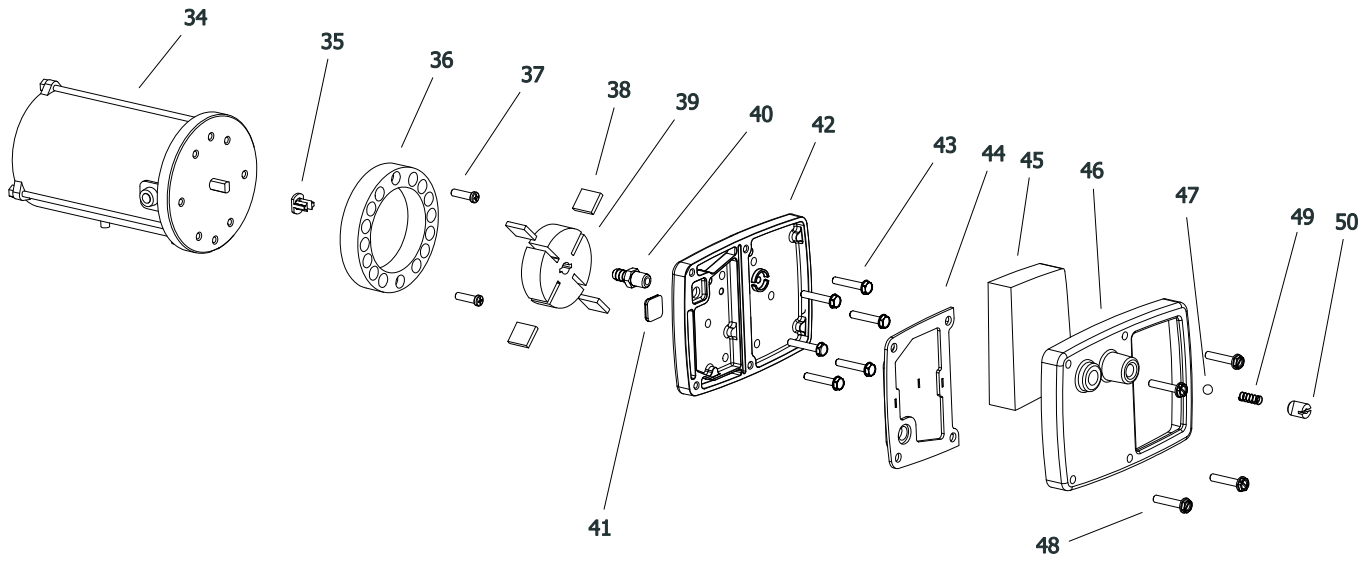

B

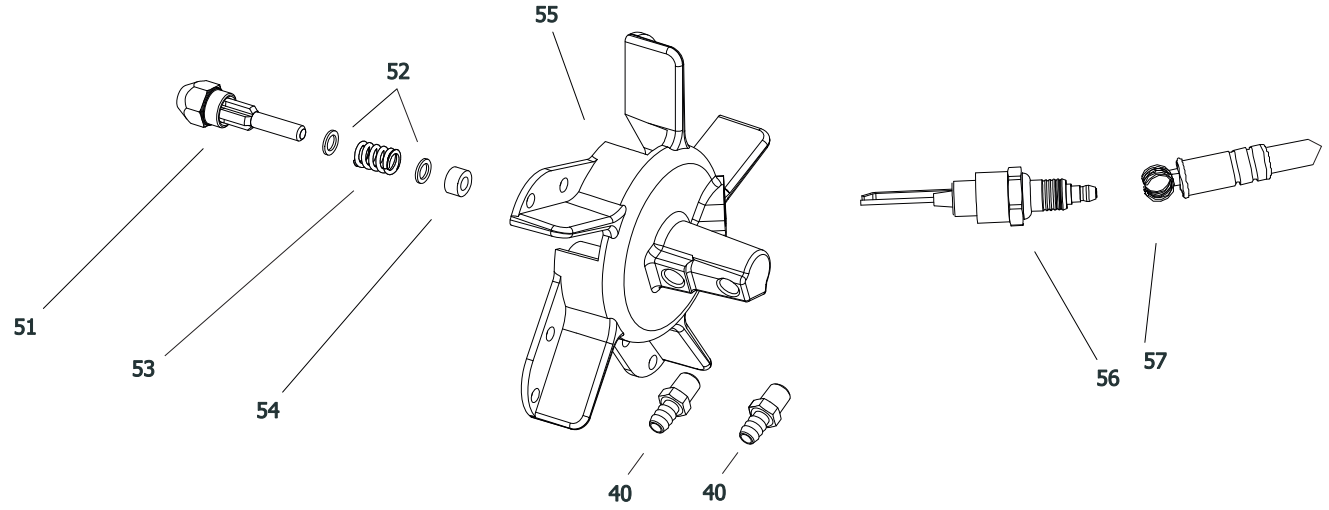

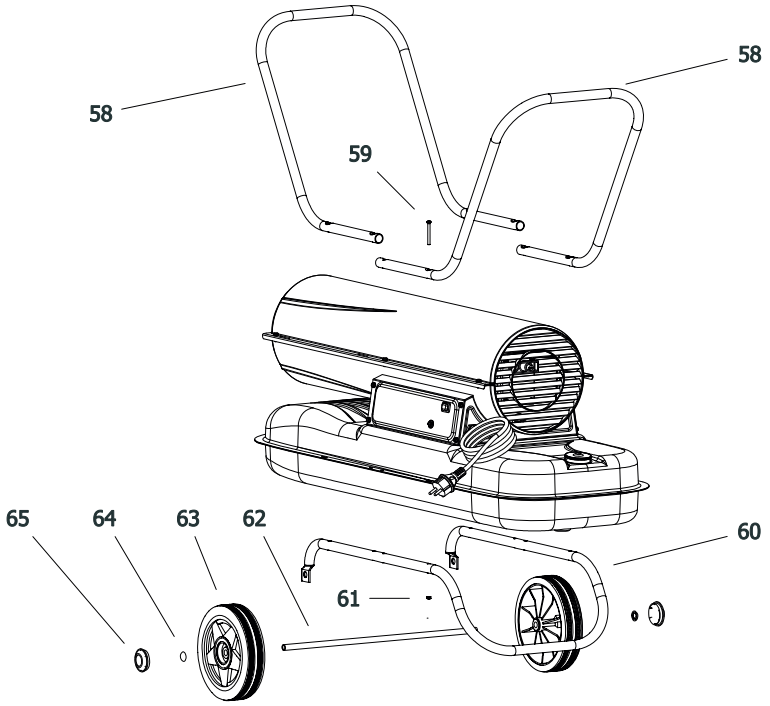

Pos.	Code NR	Description
1	4110.360	UPPER SHELL
2	4102.125	PRESSURE GAUGE CAP
3	4103.695	FAN GUARD
4	4110.294	CAPACITOR
5	4105.062	FAN
6	4110.609	ELECTRONIC IGNITOR
7	4101.240	MOTOR BRACKET
8	4150.553	BUMPER
9	4110.564	PHOTOCELL ASSEMBLY
10	4110.359	LOWER SHELL
11	4104.170	CLIP NUT
12	4100.659	PHOTOCELL BRACKET
13	4110.595	COMBUSTION CHAMBER
14	4110.354	FRONT FRAME BRACKET
15	4160.646	CABLE PROTECTION
16	4100.656	LOCKNUT
17	4106.110	TERMINAL BOARD
18	4110.417	LEFT PANEL
19	4106.179	ON/OFF SWITCH
20	4109.592	NUT
21	4104.196	FLAME-OUT CONTROL
22	4110.379	RIGHT PANEL
23	4110.353	REAR FRAME BRACKET
24	4150.528	STRAIN RELIEF
25	4110.486	POWER CORD
26	4103.891	FUEL TANK CAP
27	4105.292	FUEL TANK FILTER
28	4110.891	FUEL TANK
29	4110.356	FUEL FILTER
30	4110.355	FUEL LINE
31	4100.541	RUBBER BUSHING
32	4110.032	FUEL LINE
33	4104.147	AIR LINE
34	4110.452	MOTOR 1/4 HP
35	4108.635	INSERT
36	4101.532	PUMP BODY
37	4108.590	PUMP BODY SCREW
38	4101.666	BLADE
39	4103.441	ROTOR

Pos.	Code NR	Description
40	4104.118	BARB FITTING
41	4101.333	LINT FILTER
42	4101.325	PUMP END COVER
43	4108.536	SCREW/LOCKWASHER 4,8x30
44	4101.341	OUTPUT FILTER
45	4101.358	INTAKE FILTER
46	4108.643	END COVER
47	4108.379	STEEL BALL
48	4108.528	SCREW/LOCKWASHER 4,8x25
49	4102.141	PRESSURE RELIEF SPRING
50	4102.133	ADJUSTING SCREW
51	4103.898	NOZZLE
52	4100.525	WASHER
53	4100.533	NOZZLE SEAL SPRING
54	4101.622	NOZZLE SEAL SLEEVE
55	4105.187	BURNER HEAD BODY
56	4101.846	SPARK PLUG
57	4110.194	HT CABLE
58	4110.368	HANDLES
59	4110.144	SCREW
60	4110.369	WHEEL SUPPORT FRAME
61	4110.143	LOCK NUT
62	4110.370	AXLE
63	4110.084	WHEEL
64	4110.162	WASHER
65	4110.129	CAP NUT

B 150 CED 2011 MODEL

From Serial Number: 31107044

Edizione 2011
Rev. A

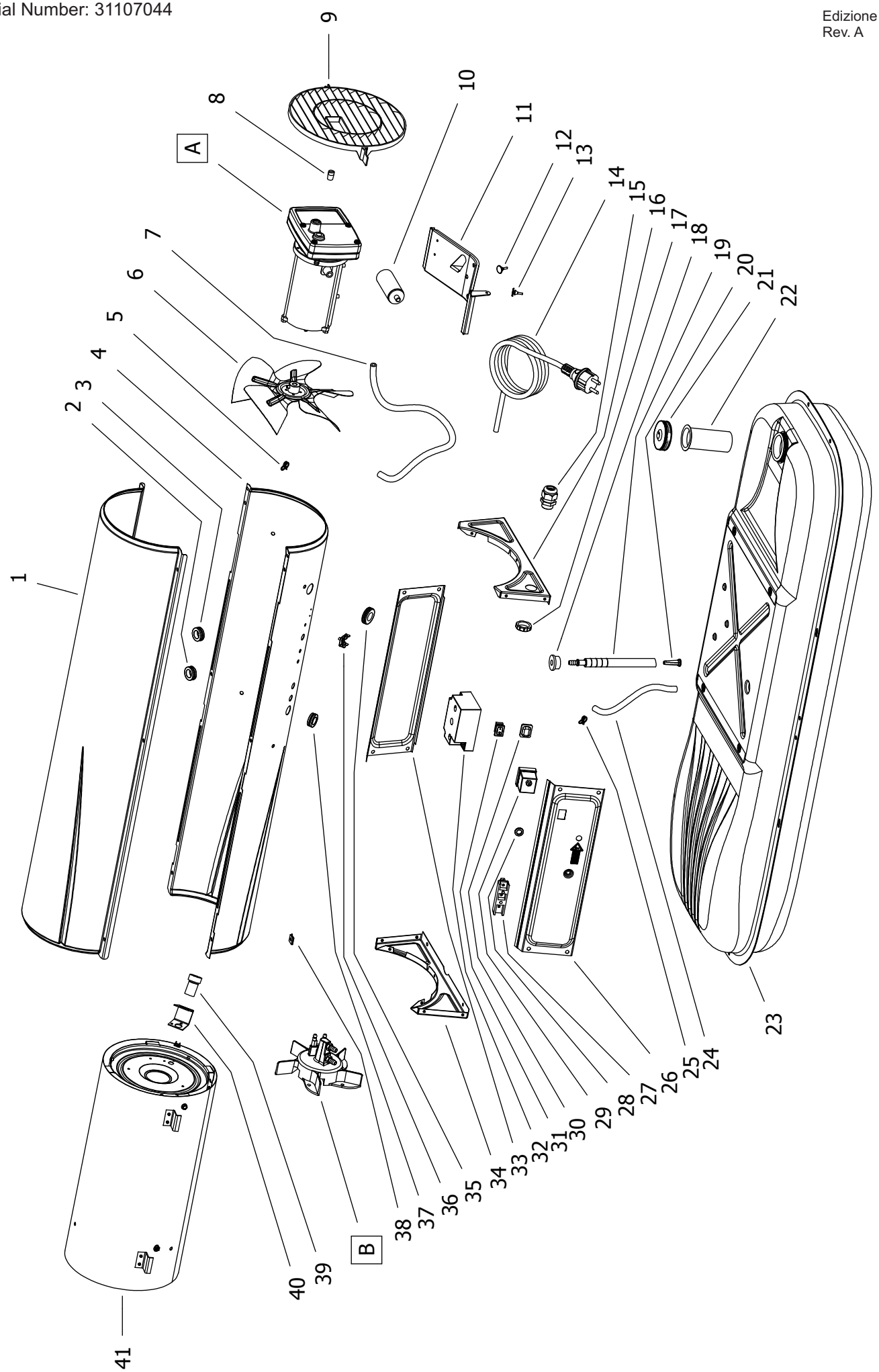

B 150 CED 2011 MODEL

A

From Serial Number: 31107044

Edizione 2011
Rev. A

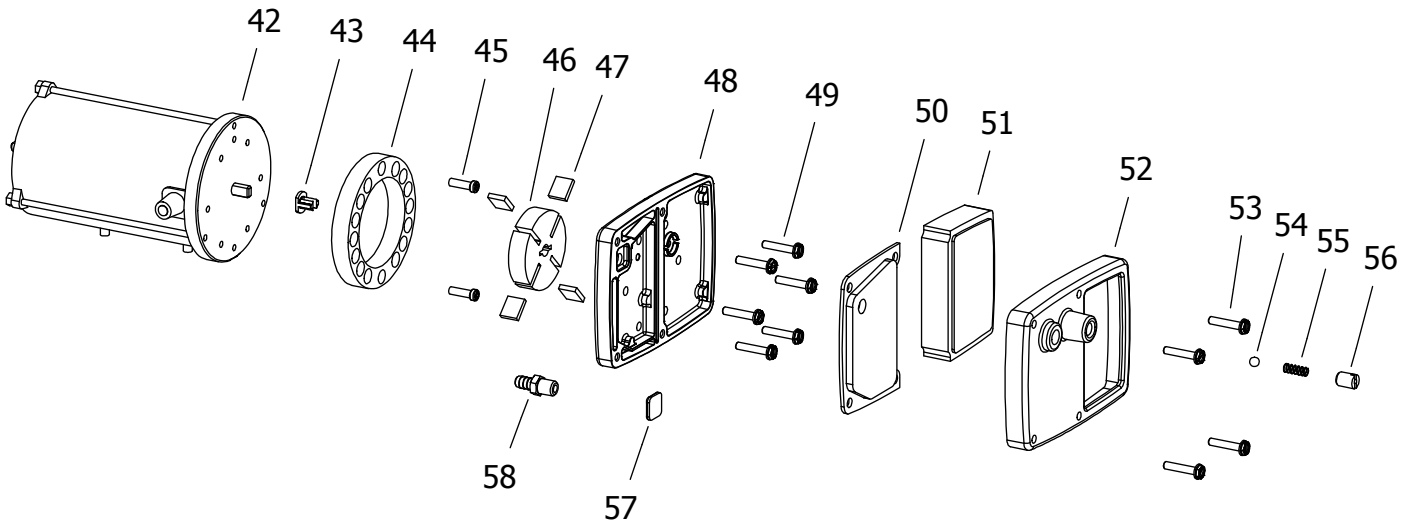

B

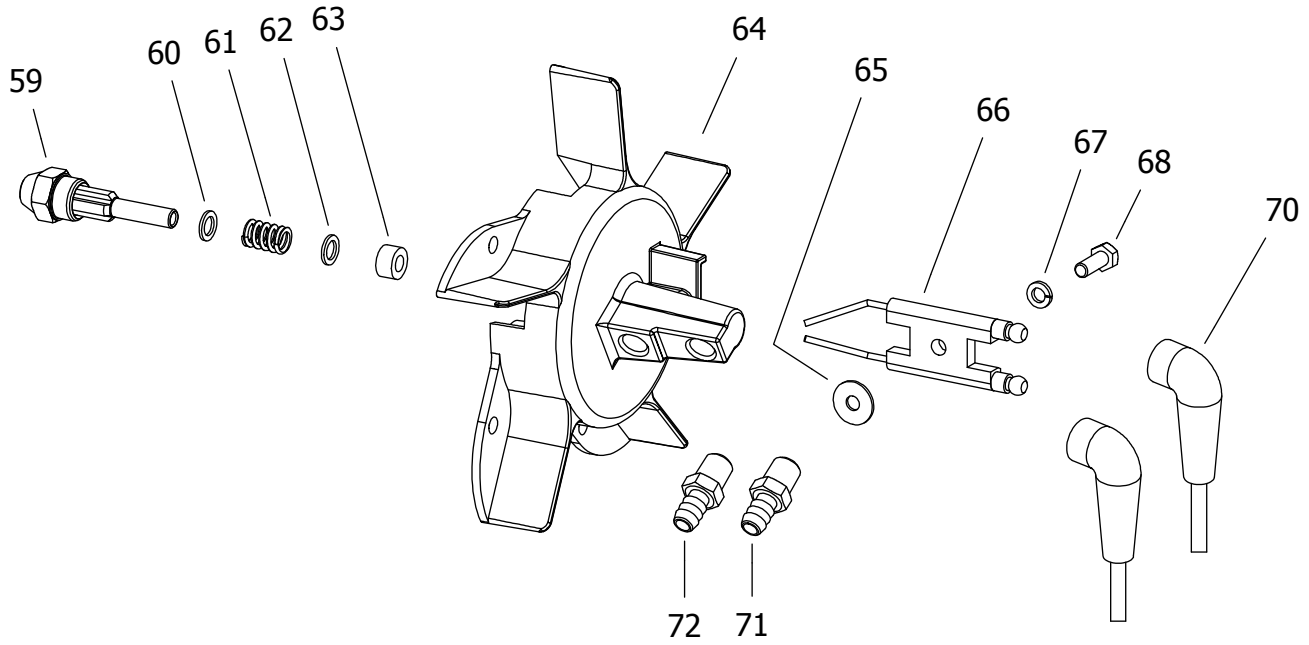

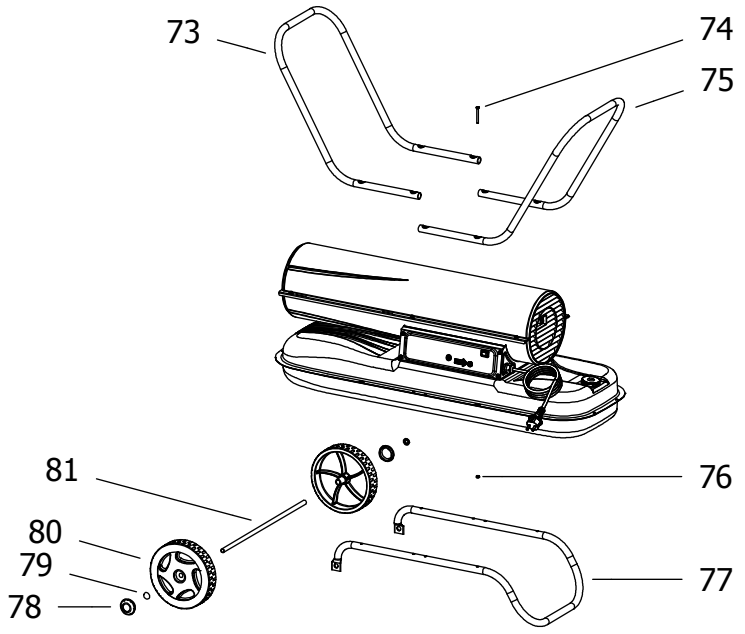

Pos.	Code NR	Description
1	4110.360	UPPER SHELL
2	4101.151	GROMMET
3	4101.151	GROMMET
4	4110.359	LOWER SHELL
5	4110.159	CLAMP
6	4105.062	FAN
7	4104.147	AIR LINE
8	4102.125	PRESSURE GAUGE CAP
9	4103.695	FAN GUARD
10	4110.294	CAPACITOR
11	4101.240	MOTOR BRACKET
12	4150.553	BUMPER
13	4150.553	BUMPER
14	4110.451	POWER CORD
15	4150.528	STRAIN RELIEF
16	4110.353	REAR FRAME BRACKET
17	4100.656	LOCKNUT
18	4100.541	RUBBER BUSHING
19	4110.355	FUEL LINE
20	4110.356	FUEL FILTER
21	4103.891	FUEL TANK CAP
22	4105.292	FUEL TANK FILTER
23	4110.891	FUEL TANK
24	4110.032	FUEL LINE
25	4110.159	CLAMP
26	4111.819	LEFT PANEL
27	4106.110	TERMINAL BOARD
28	4109.592	NUT
29	4104.196	FLAME-OUT CONTROL
30	4104.336	COVER SWITCH
31	4106.179	ON/OFF SWITCH
32	4111.885	ELECTRONIC IGNITOR
33	4110.379	RIGHT PANEL
34	4110.354	FRONT FRAME BRACKET
35	4160.646	GROMMET
36	4160.639	RIVET POP
37	4101.151	GROMMET
38	4104.170	CLIP NUT
39	4110.564	PHOTOCELL ASSEMBLY
40	4100.659	PHOTOCELL BRACKET
41	4110.595	COMBUSTION CHAMBER
42	4110.452	MOTOR 1/4 HP
43	4108.635	INSERT

Pos.	Code NR	Description
44	4101.532	PUMP BODY
45	4108.590	PUMP BODY SCREW
46	4103.441	ROTOR
47	4101.666	BLADE
48	4101.325	PUMP END COVER
49	4108.536	SCREW/LOCKWASHER
50	4101.341	OUTPUT FILTER
51	4101.358	INTAKE FILTER
52	4108.643	END COVER
53	4108.528	SCREW/LOCKWASHER
54	4108.379	STEEL BALL
55	4102.141	PRESSURE RELIEF SPRING
56	4102.133	ADJUSTING SCREW
57	4101.333	LINT FILTER
58	4104.118	BARB FITTING
59	4103.898	NOZZLE
60	4100.525	WASHER
61	4100.533	NOZZLE SEAL SPRING
62	4100.525	WASHER
63	4101.622	NOZZLE SEAL SLEEVE
64	4110.377	BURNER HEAD BODY
65	4110.394	FIBER WASHER
66	4110.337	BIFILAR ELECTRODES
67	4110.393	WASHER
68	4110.363	SCREW
70	4111.831	HT CABLE
71	4104.118	BARB FITTING
72	4104.118	BARB FITTING
73	4110.368	HANDLE
74	4110.144	SCREW
75	4110.368	HANDLE
76	4110.143	LOCK NUT
77	4110.369	WHEEL SUPPORT FRAME
78	4110.129	CAP NUT
79	4110.162	WASHER
80	4110.084	WHEEL
81	4110.370	AXLE

B 150 CED MODEL 2012/2013

From Serial Number: 32104293

Edizione 2013
Rev. A

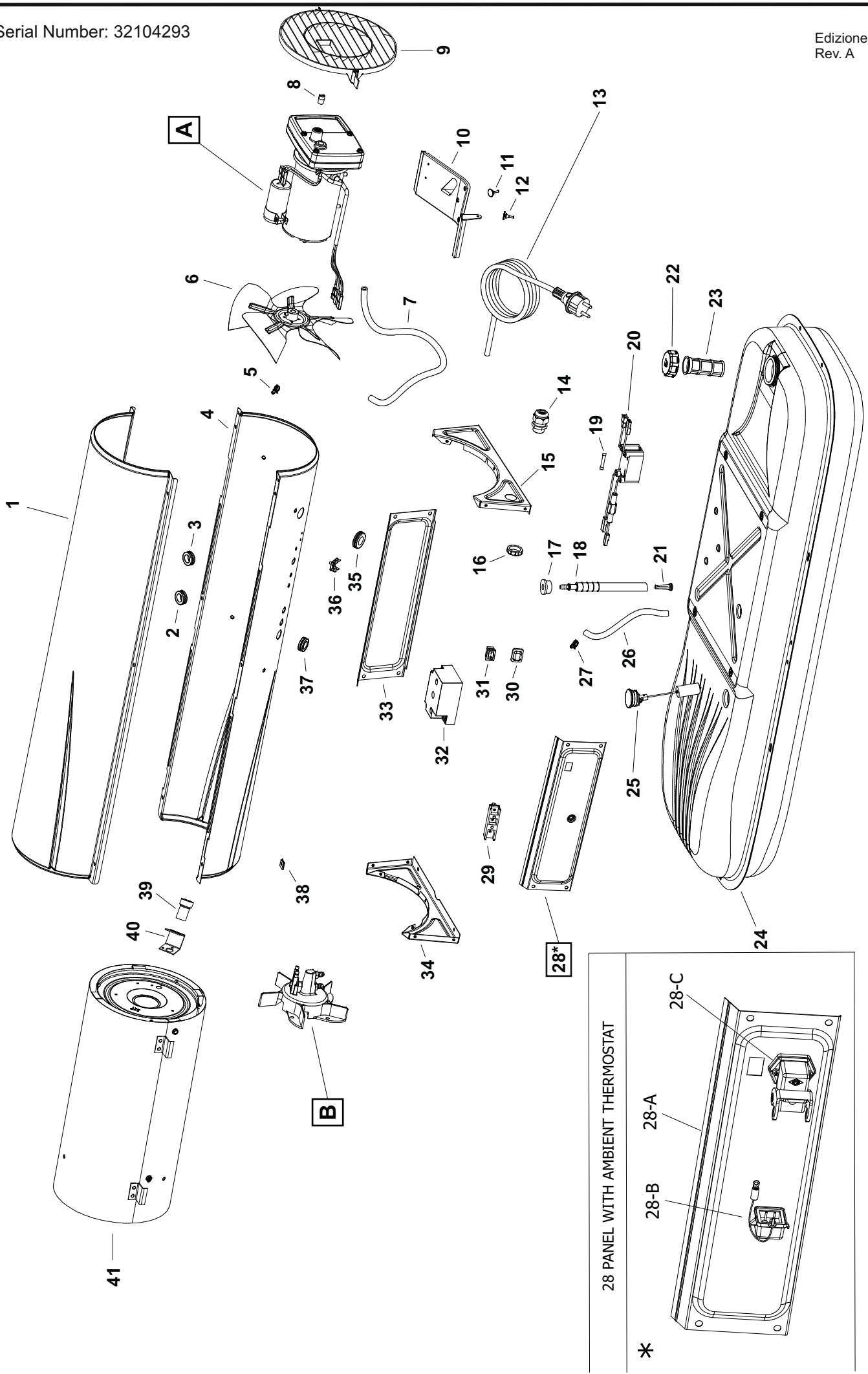

B 150 CED MODEL 2012/2013

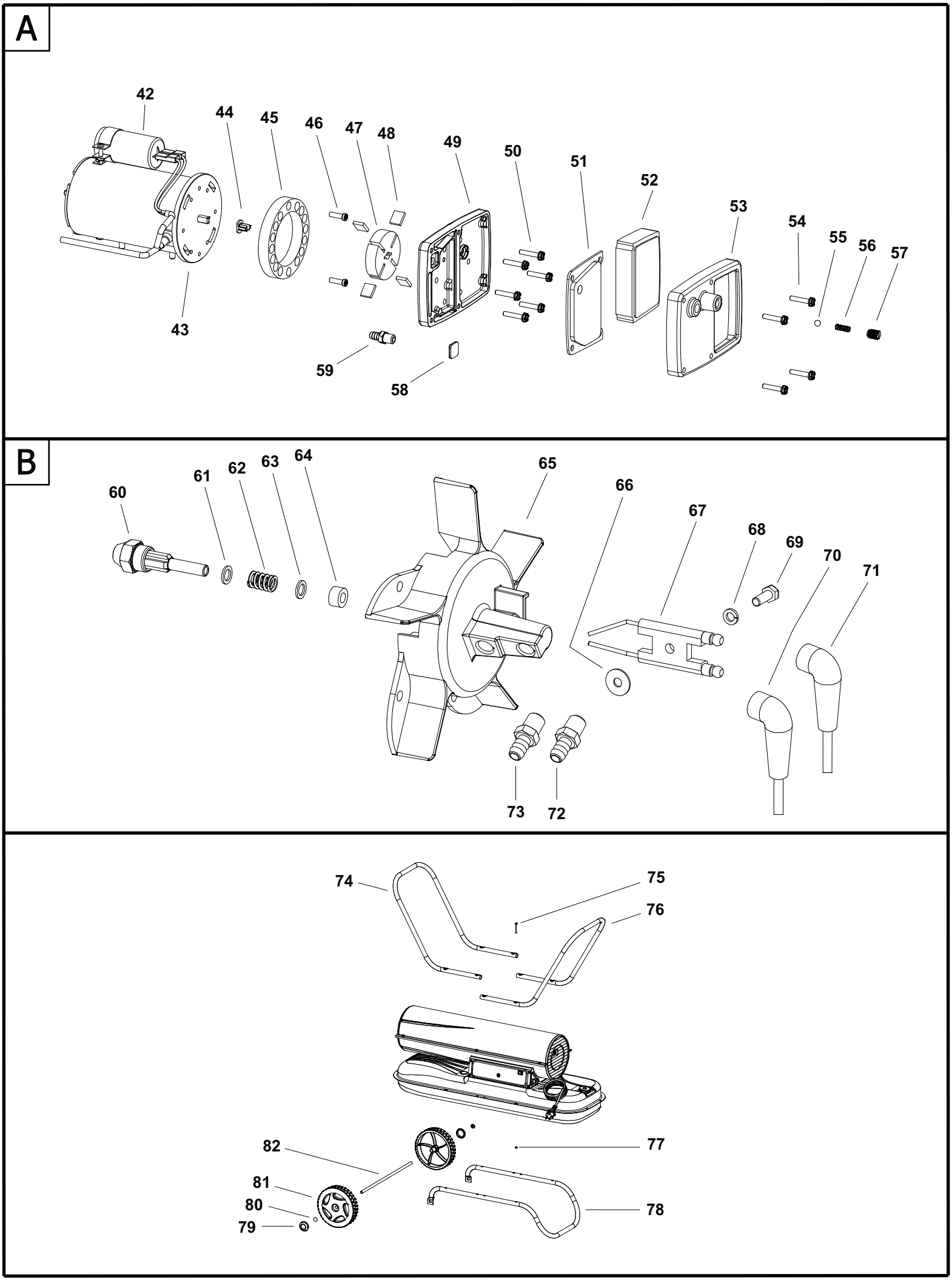

Pos.	Code NR	Description
1	4110.360	UPPER SHELL
2	4101.151	GROMMET
3	4101.151	GROMMET
4	4110.359	LOWER SHELL
5	4110.159	CLAMP
6	4105.062	FAN
7	4104.147	AIR LINE
8	4102.125	PRESSURE GAUGE CAP
9	4103.695	FAN GUARD
10	4101.240	MOTOR BRACKET
11	4150.553	BUMPER
12	4150.553	BUMPER
13	4110.451	POWER CORD
13-A	4111.811	POWER CORD NEW ZEALAND
13-B	4110.464	POWER CORD UK
14	4150.528	STRAIN RELIEF
15	4110.353	REAR FRAME BRACKET
16	4100.656	LOCKNUT
17	4100.541	RUBBER BUSHING
18	4110.355	FUEL LINE
19	4101.864	FUSE
20	4104.193	FLAME-OUT CONTROL
21	4110.356	FUEL FILTER
22	4260.007	FUEL TANK CAP
23	4290.026	FUEL TANK FILTER
24	4110.345	FUEL TANK
25	4260.017	FUEL GAUGE CED
26	4110.032	FUEL LINE
27	4110.159	CLAMP
28-A	4100.513	LEFT PANEL FOR AMBIENT THERMOSTAT
28-B	4162.467	CAP FOR THERMOSTAT SOCKET
28-C	4111.119	THERMOSTAT SOCKET
29	4106.110	TERMINAL BOARD
30	4104.336	COVER SWITCH
31	4106.179	ON/OFF SWITCH
32	4111.885	ELECTRONIC IGNITOR
33	4110.379	RIGHT PANEL
34	4110.354	FRONT FRAME BRACKET
35	4160.646	GROMMET
36	4160.639	RIVET POP
37	4101.151	GROMMET
38	4104.170	CLIP NUT
39	4110.564	PHOTOCELL ASSEMBLY
40	4100.659	PHOTOCELL BRACKET
41	4110.595	COMBUSTION CHAMBER
42	4111.855	CAPACITOR 10UF
42	4110.294	CAPACITOR 8UF

Pos.	Code NR	Description
43	4110.452	MOTOR 1/4 HP
44	4108.635	INSERT
45	4101.532	PUMP BODY
46	4108.590	PUMP BODY SCREW
47	4103.441	ROTOR
48	4101.666	BLADE
49	4101.325	PUMP END COVER
50	4108.536	SCREW/LOCKWASHER
51	4101.341	OUTPUT FILTER
52	4101.358	INTAKE FILTER
53	4108.643	END COVER
54	4108.528	SCREW/LOCKWASHER
55	4108.379	STEEL BALL
56	4102.141	PRESSURE RELIEF SPRING
57	4102.133	ADJUSTING SCREW
58	4101.333	LINT FILTER
59	4104.118	BARB FITTING
60	4103.898	NOZZLE
61	4100.525	WASHER
62	4100.533	NOZZLE SEAL SPRING
63	4100.525	WASHER
64	4101.622	NOZZLE SEAL SLEEVE
65	4110.377	BURNER HEAD BODY
66	4110.394	FIBER WASHER
67	4110.337	ELECTRODE
68	4110.393	WASHER
69	4110.363	SCREW
70	4111.831	HT CABLE
71	4111.831	HT CABLE
72	4104.118	BARB FITTING
73	4104.118	BARB FITTING
74	4110.368	HANDLE
75	4110.144	SCREW
76	4110.368	HANDLE
77	4110.143	LOCK NUT
78	4110.369	WHEEL SUPPORT FRAME
79	4110.129	CAP NUT
80	4110.162	WASHER
81	4110.084	WHEEL
82	4110.370	AXLE