INSTRUCTION MANUAL

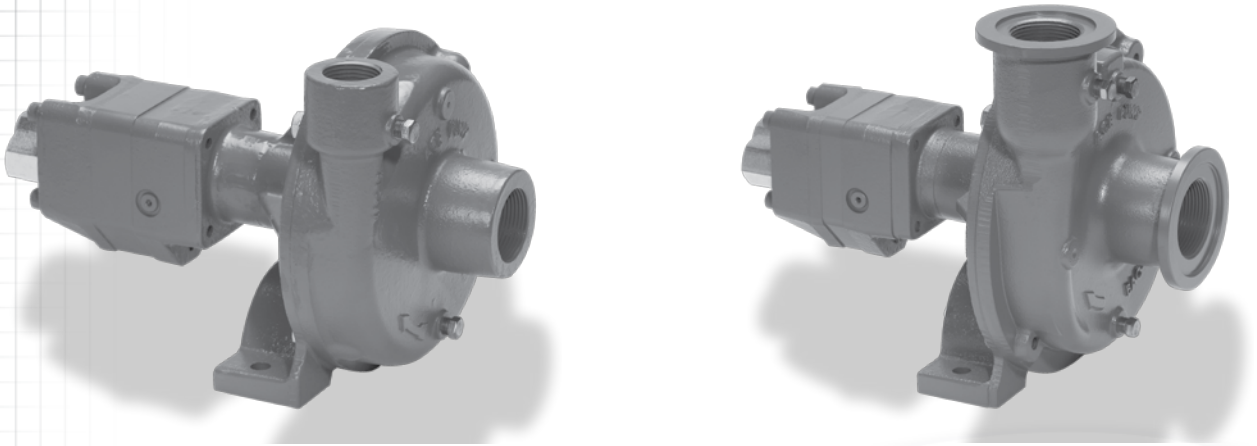

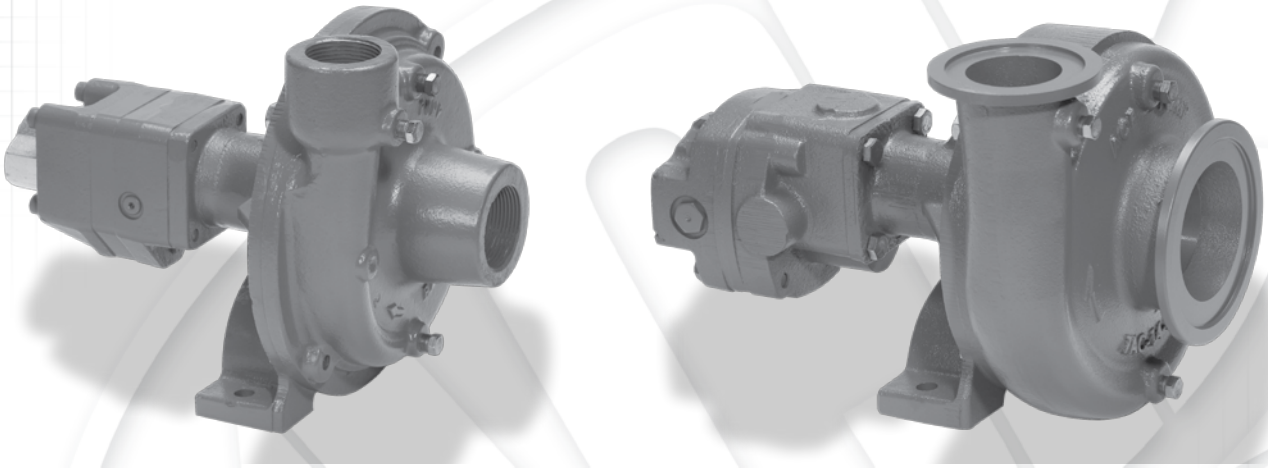

HYDRAULIC MOTOR DRIVEN CENTRIFUGAL PUMPS

agrotop
spray technology

ArtNr: 77710

STANDARD WARRANTY

Ace pumps and valves are guaranteed against defects in material and workmanship for a period of one year from date of installation. Products or parts found to be defective upon inspection at the factory will be repaired or replaced at our discretion.

Ace Pump Corporation shall not be held liable for damages caused by abuse or misuse of the product or parts. No claim for labor in repairing or replacing such products will be allowed nor will loss of time or inconvenience be considered warranty obligations.

IMPORTANT: Pumps or valves returned for warranty consideration which are tested and found to perform within specifications are subject to an inspection charge.

PLEASE NOTE EXCEPTIONS

1. All seals are covered against defects in materials or workmanship. Seal failures resulting from application related conditions are not covered. Most seal failures are due to application conditions such as: (1) abrasive solution scratching the polished seal faces; (2) chemical attack on elastomer or glue; (3) thermal shock from running pump dry or improper priming; (4) failure to flush chemical from pump after use.

2. Gasoline engines are covered by the engine manufacturer's warranty. Engines submitted for warranty consideration should be returned to the nearest authorized engine repair station. DO NOT RETURN ENGINE TO ACE PUMP CORPORATION. If unable to locate nearest engine repair station, consult Ace for referral.

3. On Ace belt driven centrifugal pumps, belt alignment is not to be considered as covered by warranty. Misalignment can occur in transit and is easily corrected at point of installation.

4. Repair requests under the above categories will not be considered warranty, and current repair and transportation charges will apply.

PROCEDURE

To return a pump, valve, or part for warranty consideration, please call Ace Pump and request a Returned Goods Authorization (RGA) number (800-843-2293). Please request one RGA number for each pump or valve. Provide the part number of the item being returned along with the reason for return. Be specific when describing the nature of the defect. Include this information in the box along with a customer contact name, phone number, and return address. Ship pump prepaid freight. Package pump in original packaging or similar to prevent damage in shipment. Warranty determinations will be made after the product has been received and inspected.

This warranty is in lieu of all other warranties, express or implied, and Ace Pump Corporation does not authorize any other person to assume for it any obligation or liability in connection with the sale of said pumps, valves, or any parts thereof.

WARNING: Pumps returned to Ace must be free of chemical hazard. Chemicals must be neutralized and thoroughly rinsed. Pumps with indications of active chemical will not be considered for repair or warranty.

TABLE OF CONTENTS

Warnings	1
Plumbing Diagram	2
Motor Features	2
Sprayer Plumbing Suggestions	3
Pump Mounting	3
Hydraulic System Connections	3
Hydraulic Seals	3
Regulating Hydraulic Flow To The Sprayer Pump	4
Disassembly Instructions	6
Pump Repair Kits	6
Assembly Instructions	7
Maintenance	7
Motor Repair Kits & Installation	8
Trouble Shooting	10

Note: Pump performance data, dimensions, and parts listings are on individual pump specification sheets and are not included in this manual. The specification sheets may be downloaded from the Product Literature page at www.AcePumps.com or call 800-843-2293 to request a copy.

WARNINGS

AVOID HIGH PRESSURE FLUIDS

Escaping fluid under pressure may penetrate the skin causing serious injury. Avoid the hazard by relieving pressure before disconnecting hydraulic lines. Tighten all connections before applying pressure and inspect hoses regularly for wear or damage. If an accident occurs, see a doctor immediately. Any fluid injected into the skin must be surgically removed within a few hours or gangrene may result.

NEVER OPERATE MOTOR UNLESS ATTACHED TO PUMP

The motor should never be operated separate from the pump. The four bolts which attach the motor to the pump also provide the strength necessary to hold the motor together during operation. Operating the motor separate from the pump may cause the motor to explode. The shaft seal may also be ejected when hydraulic pressure is applied. Motor damage and personal injury may result.

HANDLE CHEMICAL PRODUCTS SAFELY

Direct exposure to hazardous chemicals may cause serious injury. Potentially hazardous chemicals used with Ace pumps are hydraulic fluid, fertilizer, and chemicals. A Material Safety Data Sheet (MSDS) provides specific details on chemical products: physical and health hazards, safety procedures, and emergency response techniques. Check the MSDS before starting any job using a hazardous chemical.

PLUMBING DIAGRAM

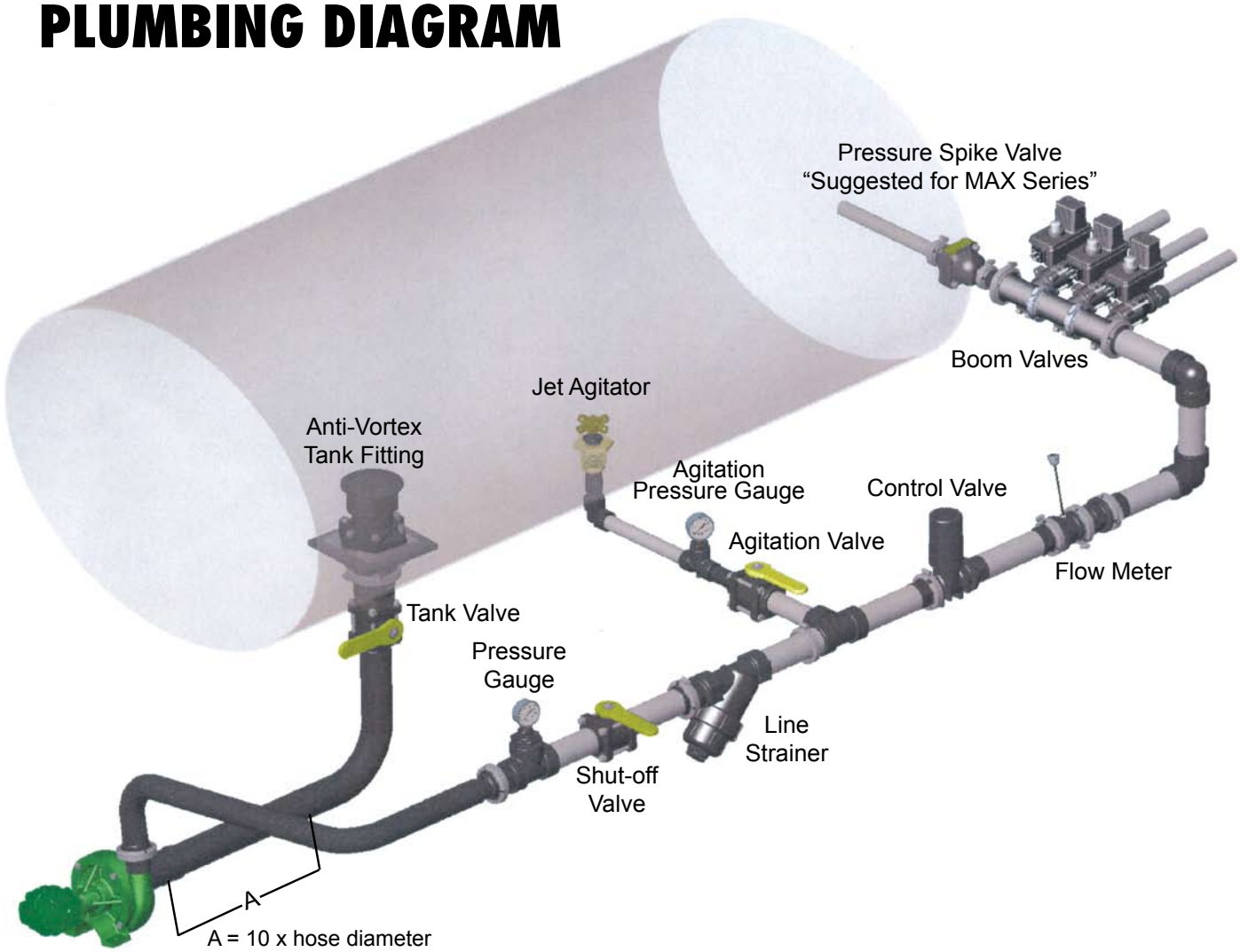

HYDRAULIC MOTOR FEATURES

Coasting Check - This internal feature is standard for all Ace hydraulic motors. It protects the motor seal from pressure spikes created by the flywheel effect of the impeller when the pump is turned off.

Needle Valve - The valve allows for bypass of excess hydraulic fluid on open center hydraulic systems. The valve has a threaded needle with a slotted end and lock nut. The needle on 300A motors is located under a hex cap with no lock nut.

Reverse Flow Check - The check valve prevents damage by not allowing the pump to run backwards. The valve is an external fitting on the 200N series motors and internal on 300 series models.

Consult these Ace Product Updates for more information:

- Update 1 - Hydraulic Seals
- Update 12 - Seal Support Spacer
- Update 14 - 200N Series Motors
- Update 15 - 300A Series Motors

Hydraulic Hose Connections:

200 Series - 1/2" NPT
300 Series - 1/2" NPT

SPRAYER PLUMBING SUGGESTIONS

The primary goal when plumbing a sprayer pump is to route liquid from the pump to the spray boom with minimum restriction. Minimizing restrictions is necessary for achieving the pump's maximum rated capacity. 1) Hoses should be the same size as the pump's suction and discharge port. A straight run of 10 times the suction hose diameter is recommended prior to the pump inlet. 2) Install a pressure gauge and ball valve on the discharge side of the pump for the purpose of measuring the SHUT-OFF pressure (refer to page 4). 3) A minimum number of elbows, fittings, and valves should be used to reduce pressure losses. 4) Use spray control valves and a flowmeter that are the same size as the discharge port to prevent flow restriction. Following these guidelines is necessary for delivering the highest pressures to the boom.

PUMP MOUNTING

The following are basic guidelines for proper pump mounting: 1) The pump should be mounted below the tanks to allow gravity to naturally fill the pump with liquid. 2) The volute should be oriented with the discharge port pointing up or across the top of the pump which allows air to rise out of the pump. 3) A petcock valve can be installed in the top most pipe plug hole to allow air to be bled off each time the tanks are filled. 4) Another option would be to install a 1/8" air bleed line from the top most pipe plug hole to the sprayer tank. This will continually bleed air from the pump housing. 5) If the pump must be located above the liquid level, a foot valve should be installed to maintain the pump's prime.

The hydraulic driven centrifugal pumps are straight centrifugals and must be primed prior to operation. The word "primed" means the pump must be completely full of water and any trapped air vented before a centrifugal pump can operate. Following the pump mounting guidelines will insure proper priming of the pump and avoid premature seal failure.

HYDRAULIC SYSTEM CONNECTIONS

The following hydraulic connection recommendations are important for optimum pump efficiency and extended motor seal life. 1) Hydraulic hoses should be sized to insure proper oil supply to the motor and minimize back pressure on the return side of the motor. Recommended hose sizes are 1/2" for 200 Series motors and 3/4" for 300 Series motors. The hoses should be sized larger if individual hose lengths exceed 15 feet. 2) Connect the hydraulic hoses to the tractor hydraulic couplers so the pump operates with the control lever in the "Lower/Retract" position. The pump can then be turned off in the forward "Float" position. Turning the pump off in "Float" instead of "Neutral" allows the hydraulic system pressure to equalize and reduces the occurrence of damaging pressure spikes. 3) <u>The return line should be connected to a low pressure return port if available.</u> The low pressure return port returns oil directly to the oil reservoir reducing pressure in the return line. Pressure reduction in the return line extends the motor seal life and increases the motors operating efficiency. <u>Consult your tractor dealer for low pressure return options.</u>

HYDRAULIC MOTOR SEALS

Hydraulic seal failures are typically caused by high pressure or pressure spikes in the return line. The seal is rated for 250 PSI maximum pressure. Maintaining return line below 100 PSI continuous pressure will assure maximum seal life and efficient operation. Minimize back pressures in the return line by plumbing an unobstructed return back to the hydraulic reservoir or motor return port. Avoid returning the oil through remote valves, couplers, and long undersized hose lengths. <u>Consult your tractor dealer for low pressure return options.</u>

Do not install any hydraulic components in series downstream from the sprayer pump motor.

Consult Ace Product Update 1 - Hydraulic Seals for additional information.

REGULATING HYDRAULIC FLOW TO THE SPRAYER PUMP

WARNING: FAILURE TO REGULATE OIL FLOW WILL CAUSE MOTOR FAILURE

There are three general types of hydraulic systems: 1) Load Sensing (LS), also known as Pressure-Flow Compensating Closed Center, 2) Pressure Compensating Closed Center (PC), and 3) Open Center (OPEN). The flow of hydraulic oil is regulated in a different manner for each type of hydraulic system. Consult the Tractor Hydraulic System Pump Selection Guide(HSG), Internet Hydraulic Selection Guide (IHSG) at www.AcePumps.com, or your tractor dealer to determine the type hydraulic system on your tractor and the method of regulation.

SHUT-OFF PRESSURE

Shut-off pressure is the sprayer system pressure with all flow turned off. This means closing the boom, agitation, and any by-pass valves. It is the highest pressure a centrifugal pump will achieve for a given RPM and relates directly to the flow of hydraulic oil. A pressure gauge must be located between the pump discharge and the shut off valves.

Maximum Shutoff Pressure:

FMC-75-HYD	100 PSI	FMC-150FS-HYD	120 PSI
FMC-HYD	100 PSI	FMC-150SP-HYD	120 PSI
FMC-150-HYD	120 PSI	FMC-200-HYD-210/310	80 PSI
FMC-150F-HYD	120 PSI	FMC-200-HYD-304	120 PSI

LOAD SENSING CLOSED CENTER SYSTEM

Regulate oil flow with tractor's **FLOW CONTROL** and **FLOW LIMITER**.
(Do not use restrictor orifice.)

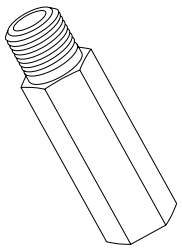

Flow Limiter
(Optional)

Setup Instructions:

1. Suggested: Remove adapter and install flow limiter in motor inlet port (marked **I**).
2. Close motor needle valve: loosen jam nut, screw needle valve clockwise until seated, and lock jam nut. (factory setting)
3. Shut off sprayer boom and agitation valves.
4. Adjust tractor flow control to minimum flow setting (turtle).
5. Move hydraulic lever to "Lower/Retract" position to start pump.
6. Adjust tractor flow control until sprayer shut-off pressure is below maximum shown in **SHUT-OFF PRESSURE** section above.
   Note: If the flow limiter stops oil flow to the motor: 6a) Move hydraulic lever to "Float" or "Neutral" to remove oil pressure from the flow limiter.
   6b) Adjust tractor flow control to a lower flow position.
   6c) Repeat steps 5 and 6.
7. Open the sprayer agitation valve to get desired spraying pressure.

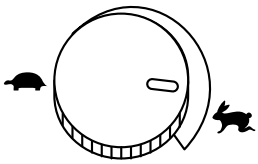

Flow Control

FLOW LIMITER

The flow limiter is a hydraulic device designed to shut off the flow of hydraulic oil when a motor's rated flow is exceeded. On tractors with LOAD SENSING (LS) Closed Center hydraulic systems, it prevents failures due to excess flow. These tractors present a great potential to run the motors beyond their rated speeds. The flows out of the hydraulic valves can exceed 29 GPM while the motors are rated at 4 to 11 GPM. The flow limiter protects the Ace motor by shutting off when hydraulic flows exceed the motor's capacity.

The flow limiter should not be used on OPEN Center or PRESSURE COMPENSATING Closed Center hydraulic systems. The flow limiter should not be used with a restrictor orifice.

Consult Ace Form # FLOW LIMITER for additional information and specifications.

PRESSURE COMPENSATING CLOSED CENTER SYSTEM

Regulate oil flow by using a **RESTRICTOR ORIFICE**. (Do not use flow limiter.)

Setup Instructions:

1. Install restrictor orifice insert inside the adapter/restrictor body in the motor inlet port (marked **I**).
2. Close motor needle valve: loosen jam nut, screw needle valve clockwise until seated, and lock jam nut. (factory setting)
3. Set “Rabbit/Turtle” flow control to “Turtle”.
4. Move hydraulic lever to the “Lower/Retract” position to start pump.
5. Adjust “Rabbit /Turtle” flow control and sprayer agitation valve to get desired spraying pressure.

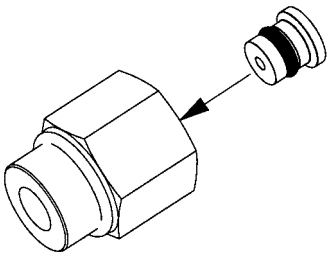

Restrictor Orifice Insert

OPEN CENTER SYSTEM

Select motor size closest to tractor’s hydraulic system capacity. Regulate oil flow with motor **NEEDLE VALVE**. (Do not use restrictor orifice or flow limiter.)

Setup Instructions:

1. Shut off sprayer boom and agitation valves.
2. **200N** - Loosen jam nut on motor and back out needle valve 3 or 4 turns counter clockwise.
   300A - Remove hex cap from side of motor and back out needle valve 3 or 4 turns counter clockwise.
3. Set tractor throttle to sprayer operating speed.
4. Move hydraulic lever to “Lower/Retract” position to start pump.
5. Screw needle valve clockwise until sprayer shut-off pressure is below maximum shown in **SHUT-OFF PRESSURE** section on previous page and lock jam nut or reinstall hex cap.
6. Open the sprayer agitation valve to get desired spraying pressure.

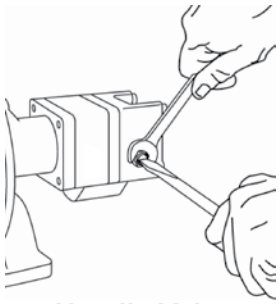

Needle Valve Adjustment

MECHANICAL SHAFT SEALS

Mechanical seals have two polished faces which run against one another forming a barrier preventing solution from leaking. A small quantity of liquid crosses the faces and is necessary to lubricate and remove heat from the seal faces. The two most common causes of seal failure are:

1) Abrasive Wear - The carbon seal face is scratched by harder material crossing the face. Damage to the seal by harder materials can be caused by abrasive solution materials, rust or corrosion near the seal, precipitates which come out of solution when heated, and residue between the seal faces when a pump is shut off and not flushed out. This type of seal failure can be minimized by flushing the pump with water after use and storing the pump filled with antifreeze to prevent corrosion and freezing.

Note: In tough applications where the standard carbon seal face is scratched or quickly worn, the **BAC-7SC** seal with extra hard silicon carbide faces is recommended.

2) Thermal Shock - The seal face is cracked by cool liquid contacting a hot seal. There is no liquid to lubricate or remove heat from the seal faces when a pump runs dry. The seal heats up rapidly to a temperature that causes damage to the seal components. The resulting thermal shock creates radial cracks in the white ceramic face and the heat may melt rubber components.

Consult Ace Product Update 2- Mechanical Seals for additional information.

DISASSEMBLY INSTRUCTIONS

1. Remove four 5/16” socket head cap screws from rear of motor.
2. Remove motor and seal support spacer.
3. Remove rear internal bearing snap ring.
4. Remove four 3/8” X 3/4” hex head cap screws from mounting frame.
5. Remove volute.
6. Remove 3/8” lock nut from shaft. Insert a flat file into impeller vane to hold stationary.
   Caution: Excess torque may cause damage to plastic impellers.
7. Press shaft out of impeller using one 5/16” socket head cap screw from step #1.
8. Remove impeller, key, and rotating seal member.
9. Press shaft/bearing assembly out of frame.
10. Remove stationary seal member by prying out with a screwdriver or pressing out from motor end of pump housing.
11. Remove O-ring from shaft groove.
    Note: If you are only replacing the pump seal: 1) press the shaft/bearing assembly into the frame, 2) reinstall the rear internal bearing snap ring, and 3) skip to Assembly Step #8.
12. Press bearings off of shaft.
13. Remove forward internal bearing snap ring.

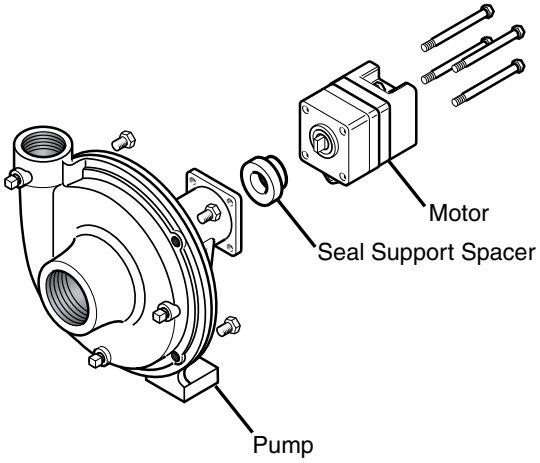

Disassembly Steps 1-5

PUMP REPAIR KITS

Ace hydraulic pump repair kits include the mechanical seal and volute O-ring. Pumps manufactured after January 1996 use the volute O-ring and have a groove machined in the volute. Older pumps require a gasket volute seal. Note: Do not use both the O-ring and gasket.

Pump Model	Standard Seal BAC-7V	Severe Duty Seal BAC-7SC
FMC-75-HYD Series	RK-GE-75	RK-GESC-75
FMC-HYD Series	RK-FMC	RK-FMCSC
FMC-150-HYD Series	RK-FMC-150	RK-FMCSC-150
FMC-150F-HYD Series	RK-FMC-150	RK-FMCSC-150
FMC-150SP-HYD Series	RK-FMC-150	RK-FMCSC-150
FMC-200-HYD Series	RK-FMC	RK-FMCSC

ASSEMBLY INSTRUCTIONS

1. Install forward internal bearing snap ring in mounting frame.
2. Press in forward bearing from rear side of mounting frame to snap ring.
3. Install two external shaft retainer rings with spacer between on shaft.
4. Press shaft assembly through forward bearing until forward shaft snap ring rests against inner face of forward bearing.
5. Press rear bearing over shaft and into housing.
6. Insert rear internal bearing snap ring.
7. Slide rubber slinger over shaft and push back to front bearing.
8. Clean old sealant from mounting frame seal bore.
9. Install O-ring in shaft groove.
10. Apply non-hardening Type 2 Permatex or similar under stationary seal flange.
11. Place stationary portion of seal over shaft and press into seal bore cavity. Use a 1-3/8” ID pipe or PTO adapter to press seal flange evenly on all sides.
12. Install rotating portion of seal over shaft and O-ring by hand. The two polished seal faces should face each other. Avoid contacting the polished seal faces.
13. Apply anti seize compound to impeller seat area on the shaft and key.
14. Insert key in keyway and install impeller on shaft.
15. Place lock washer and 3/8” lock nut on shaft and tighten nut.
16. Replace volute O-ring, volute, and four 3/8” x 3/4” cap screws.
17. Position seal support spacer in the cavity behind the pump bearing and snap ring. The smaller diameter of the 200 series spacer faces the motor. Fill the spacer hole halfway with coupling grease.
18. Install motor by aligning motor tang and coupler slot. Rotate motor to proper orientation.
19. Install four 5/16” socket head cap screws and tighten to 15 ft. lb. torque.

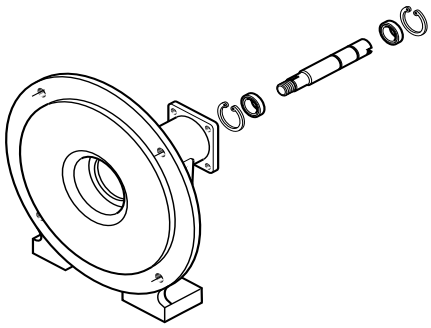

Assembly Steps 1-6

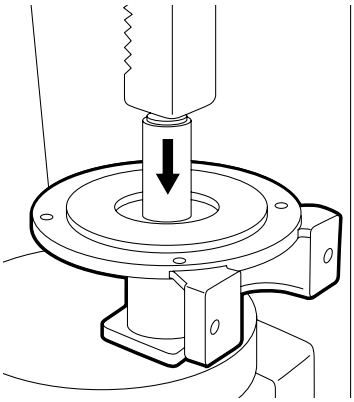

Assembly Step 11

MAINTENANCE AND STORAGE

1. Ace pumps are equipped with factory lubricated bearings and require no further lubrication.
2. If danger of freezing exists, drain the pump by removing the bottom volute pipe plug.
3. Neutralize chemicals and flush pump after each use to prevent corrosion.
4. Pump storage:
   A. Flush out pump with clean water.
   B. Fill pump with oil or recreational vehicle antifreeze to protect from corrosion and freezing.
   C. Insert plugs in the motor hydraulic ports to retain some hydraulic fluid and prevent rusting.

HYDRAULIC MOTOR REPAIR KITS

Ace hydraulic motor repair kits include all O-rings and seals necessary to rebuild the motor. The motor model number and date code are stamped on the end plate below the ports. The 200 series kit will fit all motors including those with “L”, “N”, or “R” designation. The 300 series kit will fit all motors including those with “L” or “A” designations except 310 motors with G-5 or earlier date codes.

Motor Model	Repair Kit Part Number	Ace EDP#
200 Series Motors (202, 203, 204, 206, 210)	RK-BAC-75-HYD-L	41374
300 Series Motors (304, 305, 306, 307, 310)	RK-BAC-75-HYD-300-L	41362
310 Motor (G-5 or earlier)	RK-BAC-75-HYD-310	41379

MOTOR REPAIR KIT INSTALLATION

NOTE: The seal cartridge comes on an installation bullet with a small diameter for storage and a larger diameter for installation. The seal lips curve towards the larger diameter when properly installed on the bullet. The seal should remain on the bullet until installation for best results.

DISASSEMBLY:

1. Remove motor from pump by removing four cap screws.
2. Remove seal retaining ring from drive plate if installed and discard.
3. Remove two 1/4” cap screws (200 series) or four 3/8” cap screws (300 series).
4. Draw or scribe a line on motor casing (end plate, drive plate, housing), note orientation, and pull apart.
5. Remove idler gear/shaft assembly, drive gear, and drive shaft dowel pin.
   Note: Failure to remove dowel pin will result in bushing damage.
6. Press or tap (non-marring hammer) drive shaft/bearing assembly, and seal cartridge out of drive plate.

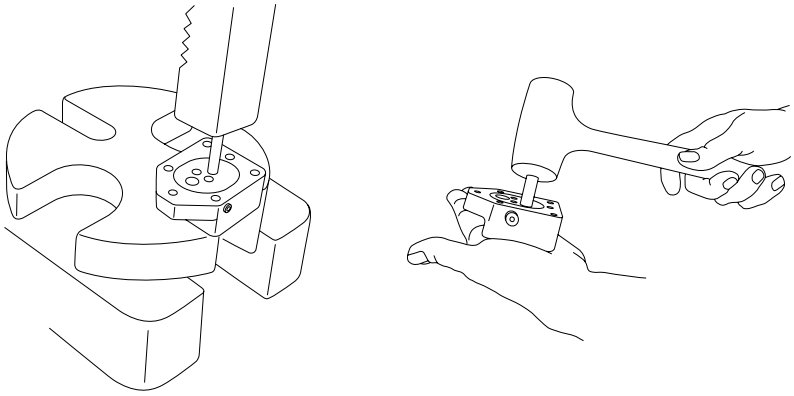

Disassembly Step 6

7. Remove and discard old “O” rings and seal cartridge. Check shaft for wear or grooving under seal and replace if damaged.

ASSEMBLY:

1. Place drive shaft/bearing assembly in drive plate.
2. Apply a thin film of hydraulic oil to the seal bullet. Insert seal/bullet assembly over shaft tang. Press seal by hand over the installation bullet until the seal casing touches the drive plate.
3. Place a 3/4” (200 Series) or 15/16” (300 Series) deep socket over seal and press or tap into seal cavity until seated.

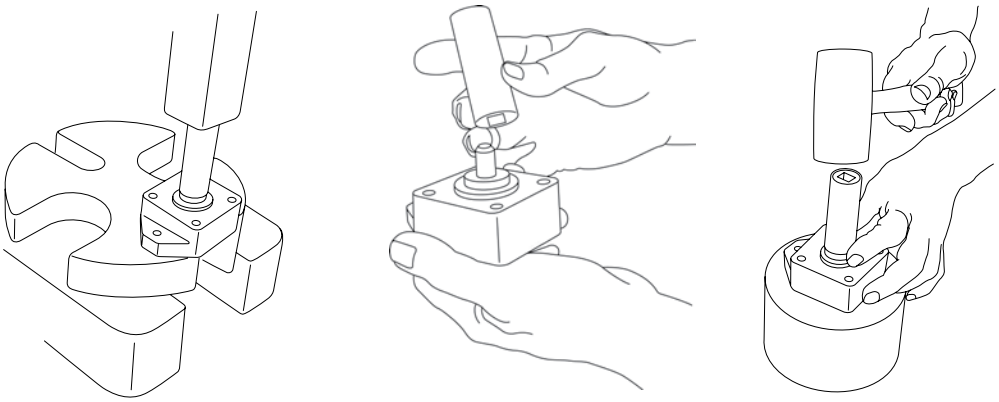

Assembly Step 3

4. Remove the installation bullet.
   Note: Do not install the seal retaining ring with the seal support spacer.
5. Lightly grease large “O” rings and insert in plate grooves. (300 series grooves in gear housing)
6. Place dowel pin and drive gear on drive shaft.
7. Place idler gear/shaft assembly in drive plate bushing.
8. Assemble the drive, center, and end plates aligning scribe marks.
9. Install two 1/4” cap screws - torque 6-8 ft-lbs (200 series) or four cap screws - torque 24 ft-lbs (300 series).
   Caution: Do not over tighten.
10. Remove needle valve, replace thread seal (metal washer with rubber insert) by screwing it onto the needle, and reassemble.
    Note: Forcing the thread seal of the needle threads may damage the seal.
11. Remove seal check cap from drive plate with 5/32” allen wrench (200 series) or 7/8” wrench (300 series), replace seal check cap “O” ring, and reassemble.
12. Position seal support spacer in the cavity behind the pump bearing and snap ring. Fill the spacer hole halfway with coupling grease.
    Note: The smaller diameter of the 200 series spacer must face the hydraulic motor.
13. Install motor by aligning motor tang and pump shaft slot. Rotate motor to proper orientation.
14. Install four 5/16” socket head cap screws and tighten to 15 ft.lb. torque.

TROUBLESHOOTING

WILL NOT PUMP LIQUID

There are several operating conditions which must be met before a hydraulic motor driven centrifugal pump can pump liquid. If the shaft is not turning, check the first and second step. If the shaft is turning, go to the third step.

First, the impeller, shaft, and gears must turn freely. The hydraulic motor is a low torque motor and will not overcome a bound up shaft. Corrosion can form between the impeller and the volute or in the seal area. With the tractor off, reach inside the suction port of the volute with your fingers and see if the impeller can easily be turned by hand.

Second, hydraulic oil must flow across the gears in the motor. Check the needle valve to make sure it is set according the instructions on pages 4 and 5. If the needle valve is backed out, oil will by-pass the gears and fail to turn the shaft. Trapped pressure in the hydraulic couplers may also prevent flow across the hydraulic motor. Reverse the hydraulic control lever to momentarily pressurize the return hose. This action will open the quick coupler valve and relieve the trapped pressure.

Third, the pump must be primed. The pump will not operate unless the volute cavity is completely full of liquid when started. Remove the top pipe plug on the volute to verify that only liquid comes out. Refer to PUMP MOUNTING section on page three.

WILL NOT DEVELOP PRESSURE

There are several factors which may contribute to a pump's inability to develop pressure.
They are: 1) insufficient shaft speed; 2) restrictions in the plumbing; 3) internal leakage in the pump.

Check the SHUT-OFF PRESSURE according to the instructions on page 4. If the Shut-off Pressure is per the specifications, then the pressure drop is due to restrictions in the plumbing. If the shut-off pressure is below the specifications, it could be due to insufficient shaft speed or internal leakage in the pump.

Restrictions in the plumbing: For every length of hose, valve, strainer, and fitting between the pump and the boom, there is a loss of pressure. Check for clogged strainers, collapsed hoses, standard port valves, and undersized plumbing.

Insufficient shaft speed: The pressure created by a centrifugal pump is a function of the pump shaft speed. The shaft speed is determined by the flow rate of hydraulic oil going across the gears. A tractor dealership can use a hydraulic flow meter to verify the GPM of oil flow going to the hydraulic motor. For instructions on how to adjust the shaft speed, refer to the section on pages 4 and 5 titled: REGULATING HYDRAULIC FLOW TO THE SPRAYER PUMP.

Internal leakage in pump: In centrifugal pumps, there is a close fit where the eye of the impeller fits into the inlet port of the volute. This close fit seals the low pressure suction liquid from the high pressure liquid inside the pump. If either the impeller or volute are worn, then the pump will not develop pressure because liquid pressure leaks through this area. If there is significant play when the eye of the impeller fits into the inlet port of the volute, replace the impeller and/or volute.

SEAL LEAKS

Refer to the sections titled MECHANICAL SHAFT SEALS on page 5 and HYDRAULIC MOTOR SEALS on page 3 for information on reducing the frequency of seal failures.

LOSES PRESSURE GRADUALLY OVER SEVERAL HOURS

When a pump starts out at the correct pressure and then gradually looses pressure over a period of several hours, the likely cause is due to the hydraulic oil heating up. As hydraulic oil heats up from 90 degrees Fahrenheit to 150 degrees, the pump performance will decrease 30%. Typically, the heat added to the system is due to energy losses caused by large bypass flows and restriction. Improper regulation of hydraulic oil to the Ace motor can cause the oil to heat up (refer to pages 4 and 5 for setup instructions).

agrotop GmbH Köferinger Straße 5 - Gebelkofen D-93083 Obertraubling
www.agrotop.com Telefon: +49(0)9453-99380 Fax: +49(0)9453-993845