DATA SHEET

24/03/2016

Receiver	From
Society	
Reference	
Address	
Phone	
Fax	
E-mail	

Item n° :

103041040

Model :

DRENAG 1200 M-A

Pump data

Free passage :	10 mm
Pressure rating :	
Min. fluid temperature :	0 °C
Max. fluid temperature :	35 °C
Max. Ambient temperature :	40 °C

Requested data

Flow :	0 m³/h
Head :	0 m
Fluid :	Water, pure
Fluid Temperature :	20 °C
Density :	998.3 kg/m³
Kinematic viscosity :	1.005 mm²/s
Vapor pressure :	100 kPa

Hydraulic data (duty point)

Flow :	
Head :	

Materials

Pump body	AISI 304 X5 Cr Ni 1810 UNI 6900/71
Impeller	AISI 304 X5 Cr Ni 1810 UNI 6900/71
Motor shaft	AISI 316 X5CrNiMo 1712 - UNI 6900/71
Disc seal	AISI 304 X5 Cr Ni 1810 UNI 6900/71
Filter	AISI 304 X5 Cr Ni 1810 UNI 6900/71
Mechanical seal pump side	Silicon carbide/Silicon carbide
Pump liner	AISI 304 X5 Cr Ni 1810 UNI 6900/71

Curve tolerance according to ISO 9906

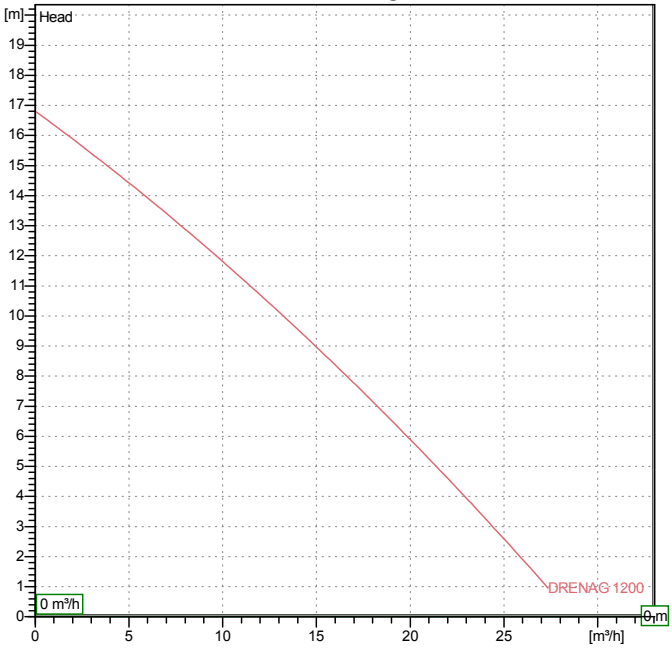

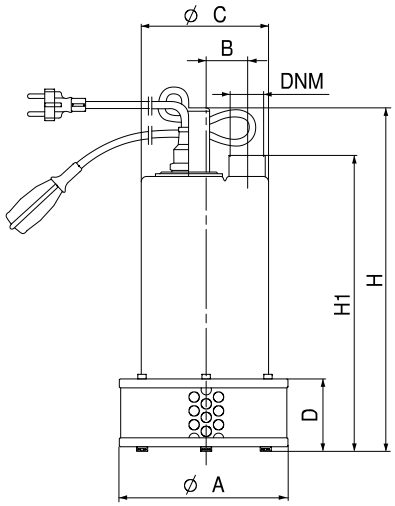

Motor data

Motor brand :	DAB	
Nominal power P2 :	1.2 kW	
Rated speed :	2800 rpm	
Rated voltage :	1~ 220-240 V	50 Hz
Nominal current :	7.5 A	
Degree of protection :	IP 68	

Weight : 18.5 kg

Dimensions in mm

A	215				
C	175				
D	71				
DNM	1" 1/2 F				
H	413				
H1	385				

Pump connection

Suction side :		/
Discharge side :	1 " 1/2	/ --

DAB PUMPS reserves the right to make modifications without notice

PERFORMANCE CURVES

24/03/2016

Receiver	From
Society Reference Address Phone Fax E-mail	

DRENAG 1200 M-A

Curve tolerance according to ISO 9906

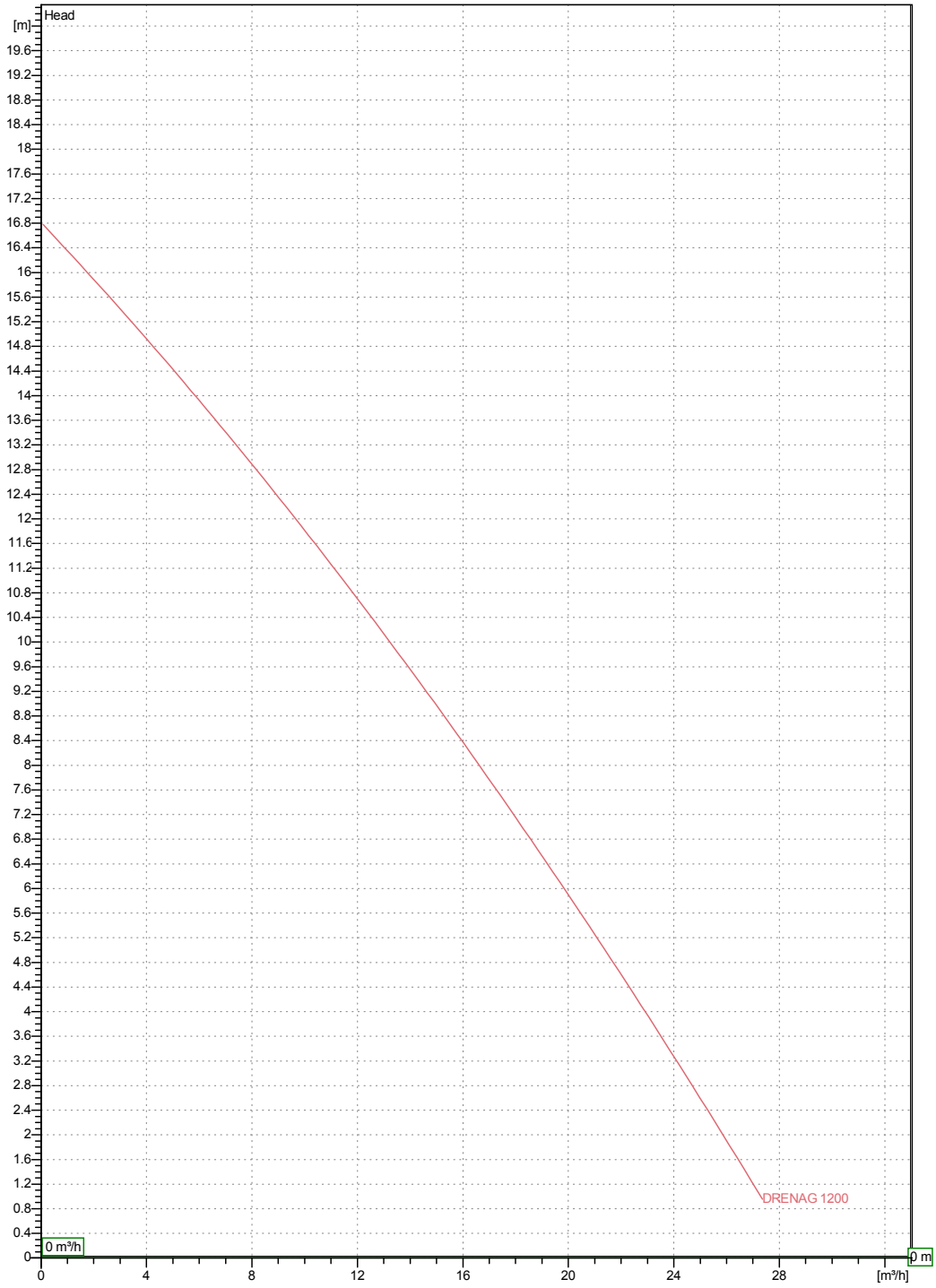

Hydraulic data (duty point)

Suction side :	Discharge side :	Flow :	Head :	Rated speed :
	1 " 1/2 --	0 m³/h	0 m	2800 rpm

Project	Project ID	Created by	Created on
			24/03/2016

DAB PUMPS reserves the right to make modifications without notice

DIMENSIONAL DRAWING

24/03/2016

Receiver	From
Society Reference Address Phone Fax E-mail	

DRENAG 1200 M-A

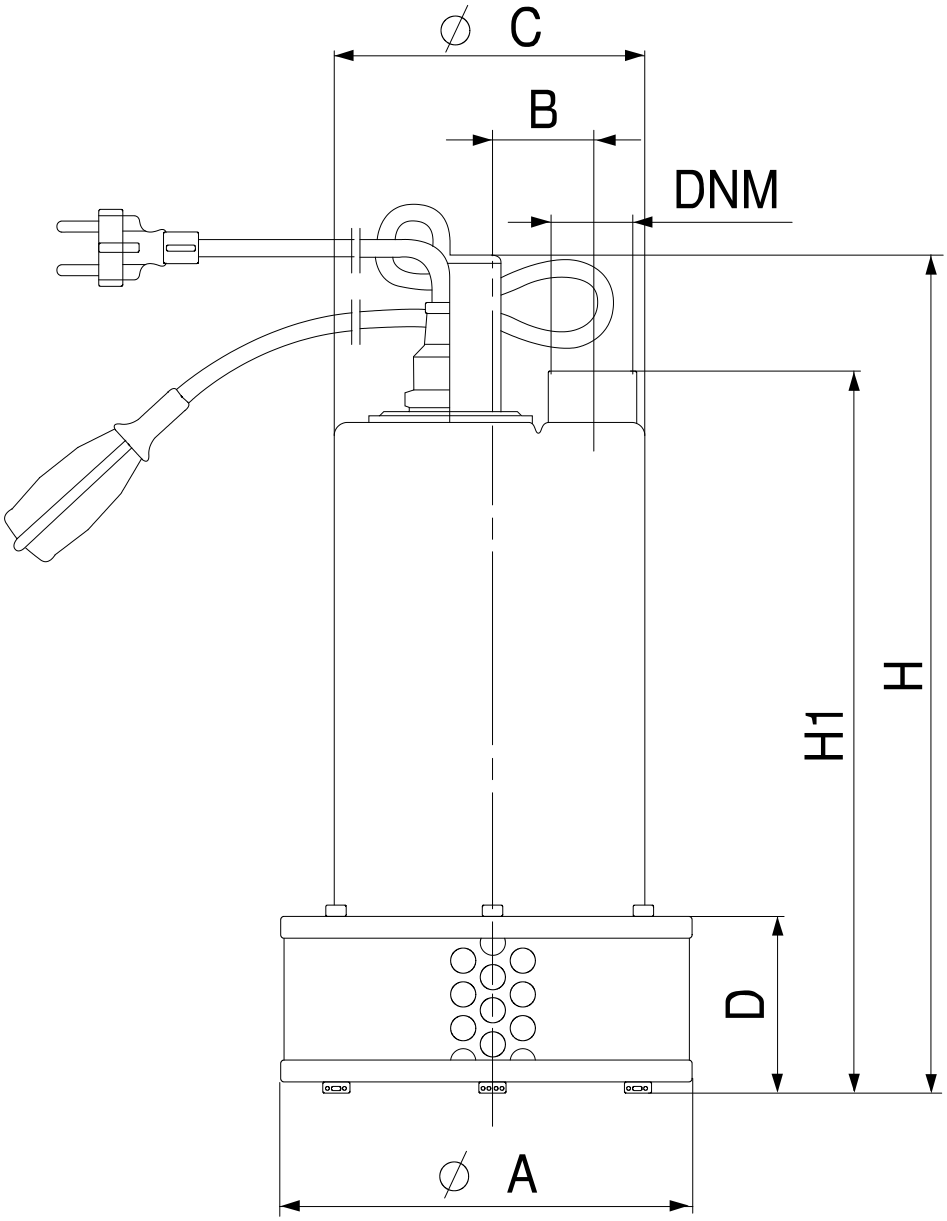

Dimensions in mm							Pump connection
1	A	215					Suction
2	C	175					
3	D	71					
4	DNM	1" 1/2 F					
5	H	413					
6	H1	385					Discharge 1 " 1/2 --

Project	Project ID	Created by	Created on
			24/03/2016

DAB PUMPS reserves the right to make modifications without notice