COMPACT CYLINDERS
SERIES 31

Double and single-acting, double-acting non-rotating, magnetic
Ø 12, 16, 20, 25 mm
Ø 32, 40, 50, 63, 80, 100 mm UNITOP

- Compact design
- Wide range of models available
- Standard magnetic
- High temperature (double-acting and non magnetic)

The compact dimensions allow Series 31 single and double-acting magnetic cylinders to be installed within confined spaces.
These cylinders are suitable for use with feet, brackets.

These cylinders are available in 10 different bore sizes from Ø12 to Ø100.
The guides are inserted in the external profile parallel to the sliding axis on three sides.
These guides are used to locate the switches that sense the piston position.
The construction design of these cylinders provides excellent axis stability.
They are available either with a male or female thread.
These cylinders can be supplied in W version for high temperatures (140°C).
This last version is not magnetic.

General Data

Type of construction	compact profile
Operation	single and double-acting
Materials	AL body and end-blocks - rolled stainless steel AISI 303 rod - AL piston rod PU seals or FKM seals for high temperatures (140°C)
Brackets	flange, feet, trunnion
Stroke min - max	Series 31R, 31M and 31F: Ø12÷25 = 1÷200mm, Ø32 ÷ 63 = 1÷300 mm, Ø80÷100 = 1÷400mm The min. stroke for the use of sensors is 10 mm. Single-acting = 5÷25 mm (see the table of standard strokes)
Operating temperature	0°C ÷ 80°C (with dry air - 20°C)
Operating pressure	1 ÷ 10 bar (double-acting); 2 ÷ 10 bar (single-acting)
Fluid	filtered air, without lubrication. If lubricated air is used, it is recommended to use oil ISOVG32. Once applied the lubrication should never be interrupted.
Speed	10 ÷ 1000 mm/sec (without load)

Products designed for industrial applications. General terms and conditions for sale are available on www.camozzi.com
This document contains a description of the products offered by Camozzi Automation at time of publication.
For more complete and up to date information about the Camozzi Automation product range, please refer to our online catalogue at https://shop.camozzi.com

COMPACT CYLINDERS
SERIES 31 - STROKES

Standard strokes

■ = Double-acting female, male
✖ = Non-rotating
● = Single-acting female, male

Ø	5	10	15	20	25	30	40	50	60	80
12	■ ✖ ●	■ ✖ ●	■ ✖	■ ✖	■ ✖	■ ✖	■ ✖			
16	■ ✖ ●	■ ✖ ●	■ ✖ ●	■ ✖ ●	■ ✖ ●	■ ✖	■ ✖			
20	■ ✖ ●	■ ✖ ●	■ ✖ ●	■ ✖ ●	■ ✖ ●	■ ✖	■ ✖	■ ✖		
25	■ ✖ ●	■ ✖ ●	■ ✖ ●	■ ✖ ●	■ ✖ ●	■ ✖	■ ✖	■ ✖		
32	■ ✖ ●	■ ✖ ●	■ ✖ ●	■ ✖ ●	■ ✖ ●	■ ✖	■ ✖	■ ✖		
40	■ ✖ ●	■ ✖ ●	■ ✖ ●	■ ✖ ●	■ ✖ ●	■ ✖	■ ✖	■ ✖	■ ✖	■ ✖
50		■ ✖ ●	■ ✖ ●	■ ✖ ●	■ ✖ ●	■ ✖	■ ✖	■ ✖	■ ✖	■ ✖
63		■ ✖ ●	■ ✖ ●	■ ✖ ●	■ ✖ ●	■ ✖	■ ✖	■ ✖	■ ✖	■ ✖
80		■ ✖ ●	■ ✖ ●	■ ✖ ●	■ ✖ ●	■ ✖	■ ✖	■ ✖	■ ✖	■ ✖
100		■ ✖ ●	■ ✖ ●	■ ✖ ●	■ ✖ ●	■ ✖	■ ✖	■ ✖	■ ✖	■ ✖

Coding Examples

31	M	2	A	032	A	050

31	SERIES 31 = compact magnetic	
M	VERSION M = male rod thread, mounted with rod nut Mod. U F = female rod thread R = non-rotating with flange only double-acting	
2	OPERATION 1 = single-acting, front spring 2 = double-acting 3 = double-acting, through-rod 4 = single-acting, rear spring 7 = single-acting, through-rod	**PNEUMATIC SYMBOLS** CS06 CD08 (Only for version M and F) - CD25 (Only for version R) CD12 (Only for version M and F) - CD25 (Only for version R) CS08 CS10
A	MATERIALS A = rolled stainless steel AISI 303 rod - AL tube profile	
032	BORE 012 = 12 mm 016 = 16 mm 020 = 20 mm 025 = 25 mm 032 = 32 mm 040 = 40 mm 050 = 50 mm 063 = 63 mm 080 = 80 mm 100 = 100 mm	
A	DESIGN TYPE A = standard	
050	STROKE (see the table)	
	SEAL OPTIONS = Standard V = Rod seal FKM W = seals in FKM for high temperatures (140°C), only available in the double-acting, non magnetic version	
	ROD LENGTH = Standard (_ _ _) = Rod extended with _ _ _ mm (only for version M and F)	
	CERTIFICATIONS = Standard EX = ATEX	

Pneumatic symbols

The pneumatic symbols which have been indicated in the CODING EXAMPLE are shown below.

CD08

CD12

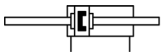

CS06

CS08

CS10

CD25

CD26

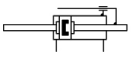

Products designed for industrial applications. General terms and conditions for sale are available on www.camozzi.com
This document contains a description of the products offered by Camozzi Automation at time of publication.
For more complete and up to date information about the Camozzi Automation product range, please refer to our online catalogue at https://shop.camozzi.com

ACCESSORIES FOR COMPACT MAGNETIC CYLINDERS SERIES 31

90° swivel combination for trunnion Mod. I

Rear trunnion Mod. C

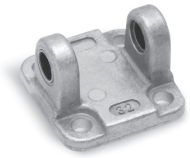

Rod fork end Mod. G

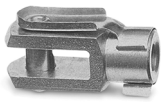

Piston rod lock nut Mod. U

90° swivel combin. for fem. trunnion Mod. ZC

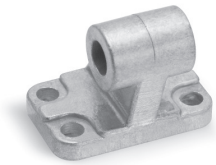

Rear trunnion Mod. L

Rear and front flange Mod. D

Foot mount Mod. B

Coupling piece Mod. GKF

Self aligning rod Mod. GK

Piston rod socket joint Mod. GY

All accessories are supplied separately.

ANTI-ROTATION - Transversal load dependant on projection

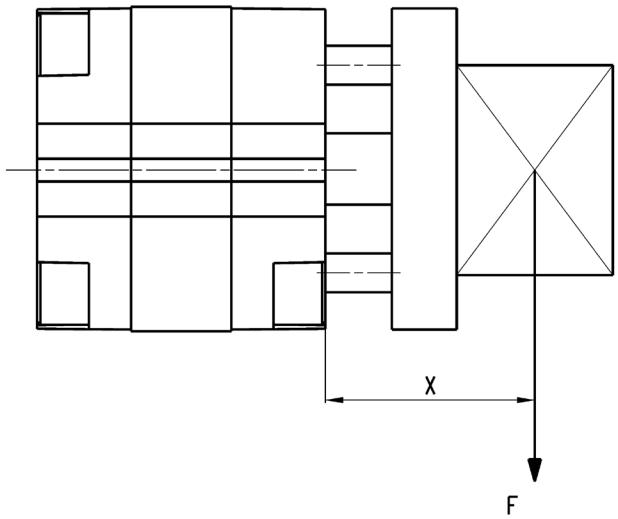

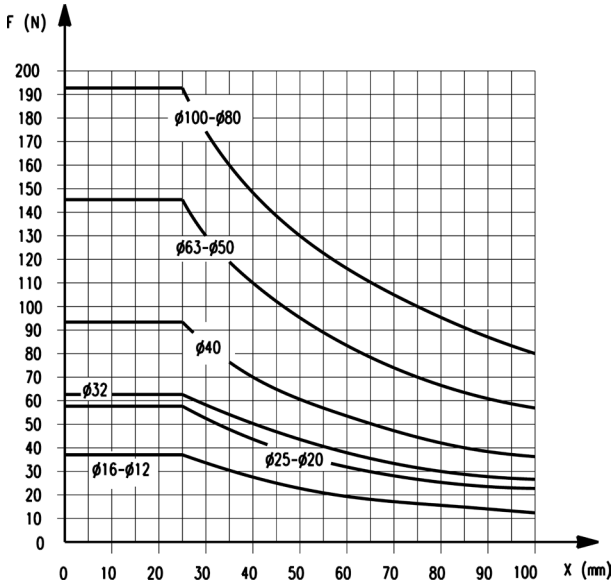

It is possible to determine the strokes required as shown in the general data in the absence of radial loads and torque moments.
When imposing radial loads on the cylinder it is important to respect the maximum projection of the baricenter.
In the presence of torque moments, it is recommended to respect the maximum stroke as shown in the diagrams.

ANTI-ROTATION THROUGH-ROD - Transversal load dependant on projection

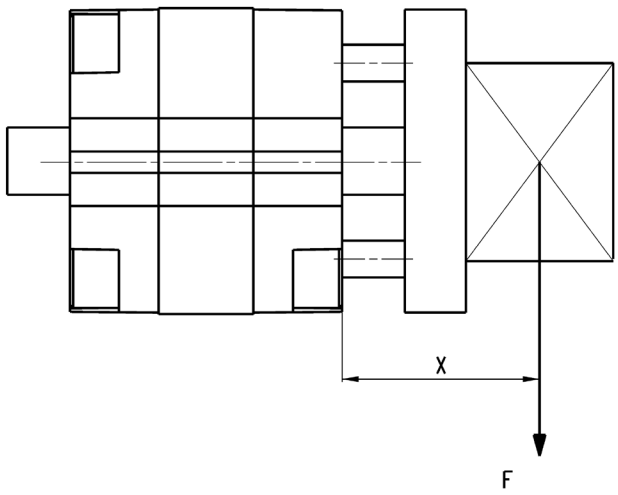

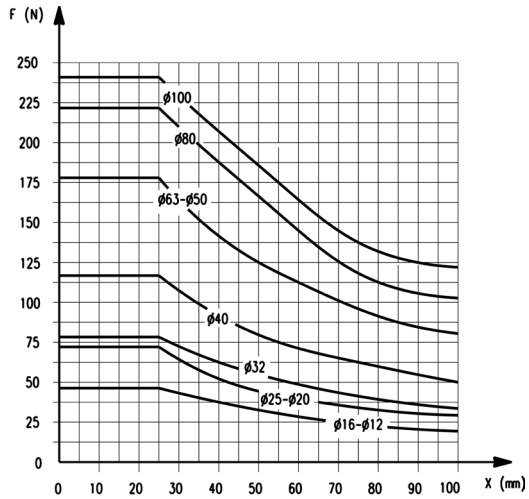

It is possible to determine the strokes required as shown in the general data in the absence of radial loads and torque moments.
When imposing radial loads on the cylinder it is important to respect the maximum projection of the baricenter.
In the presence of torque moments, it is recommended to respect the maximum stroke as shown in the diagrams.

Products designed for industrial applications. General terms and conditions for sale are available on www.camozzi.com
This document contains a description of the products offered by Camozzi Automation at time of publication.
For more complete and up to date information about the Camozzi Automation product range, please refer to our online catalogue at https://shop.camozzi.com

TORQUE MOMENT - dependant on stroke C

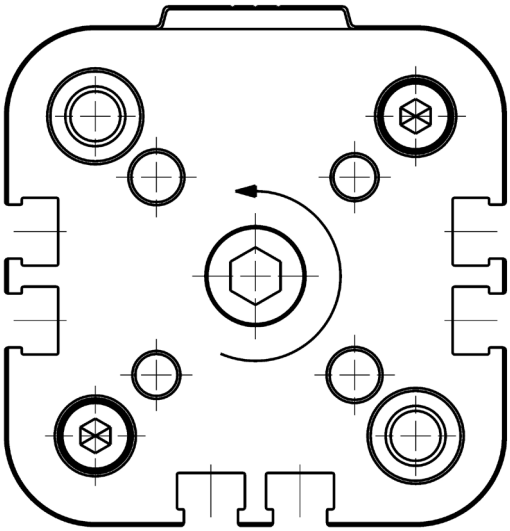

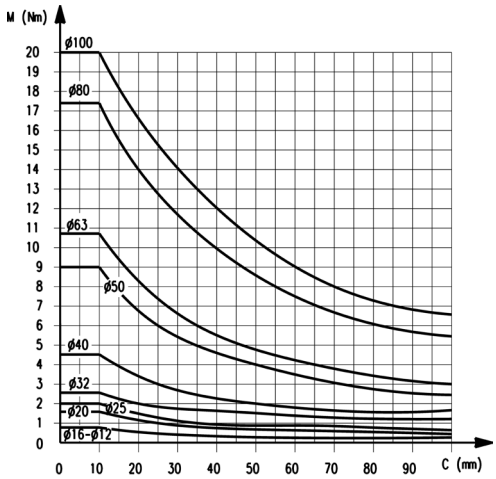

It is possible to determine the strokes required as shown in the general data in the absence of radial loads and torque moments.
When imposing radial loads on the cylinder it is important to respect the maximum projection of the baricenter.
In the presence of torque moments, it is recommended to respect the maximum stroke as shown in the diagrams.

TRANSVERSAL LOAD - dependant on projection

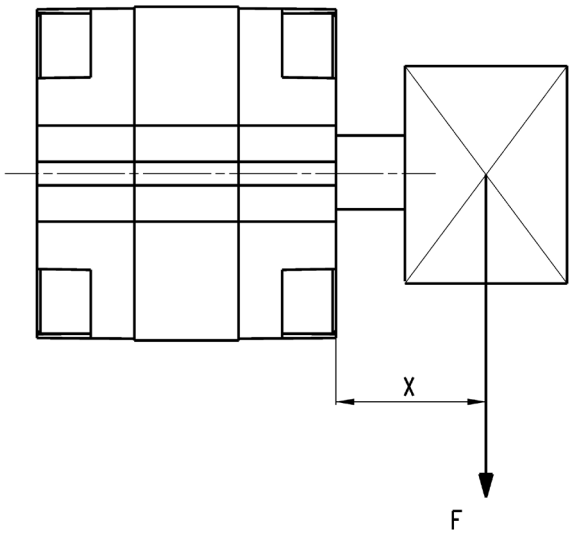

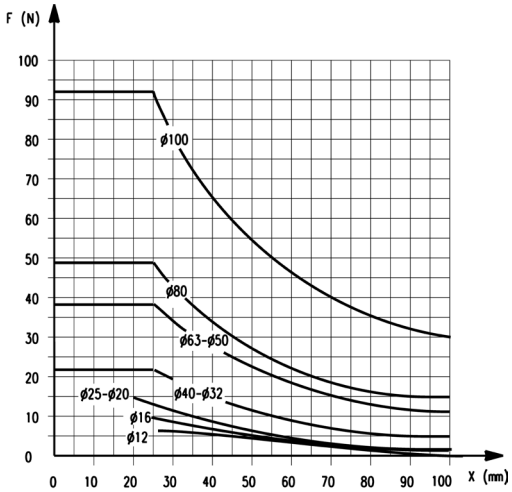

It is possible to determine the strokes required as shown in the general data in the absence of radial loads and torque moments.
When imposing radial loads on the cylinder it is important to respect the maximum projection of the baricenter.
In the presence of torque moments, it is recommended to respect the maximum stroke as shown in the diagrams.

TRANSVERSAL LOAD THROUGH-ROD - dependant on projection

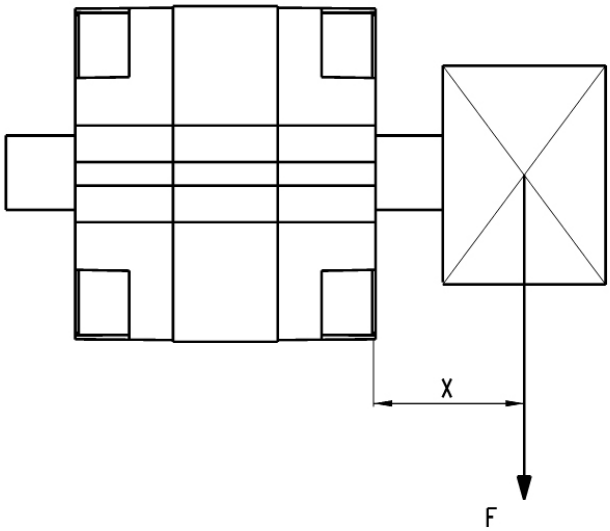

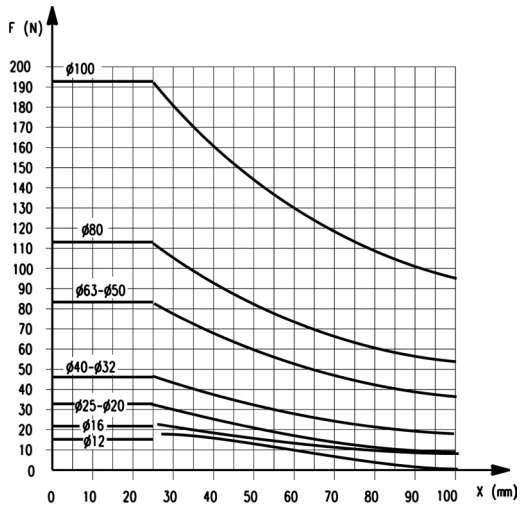

It is possible to determine the strokes required as shown in the general data in the absence of radial loads and torque moments.
When imposing radial loads on the cylinder it is important to respect the maximum projection of the baricenter.
In the presence of torque moments, it is recommended to respect the maximum stroke as shown in the diagrams.

Products designed for industrial applications. General terms and conditions for sale are available on www.camozzi.com
This document contains a description of the products offered by Camozzi Automation at time of publication.
For more complete and up to date information about the Camozzi Automation product range, please refer to our online catalogue at https://shop.camozzi.com

Compact magnetic cylinders Mod. 31F and 31M

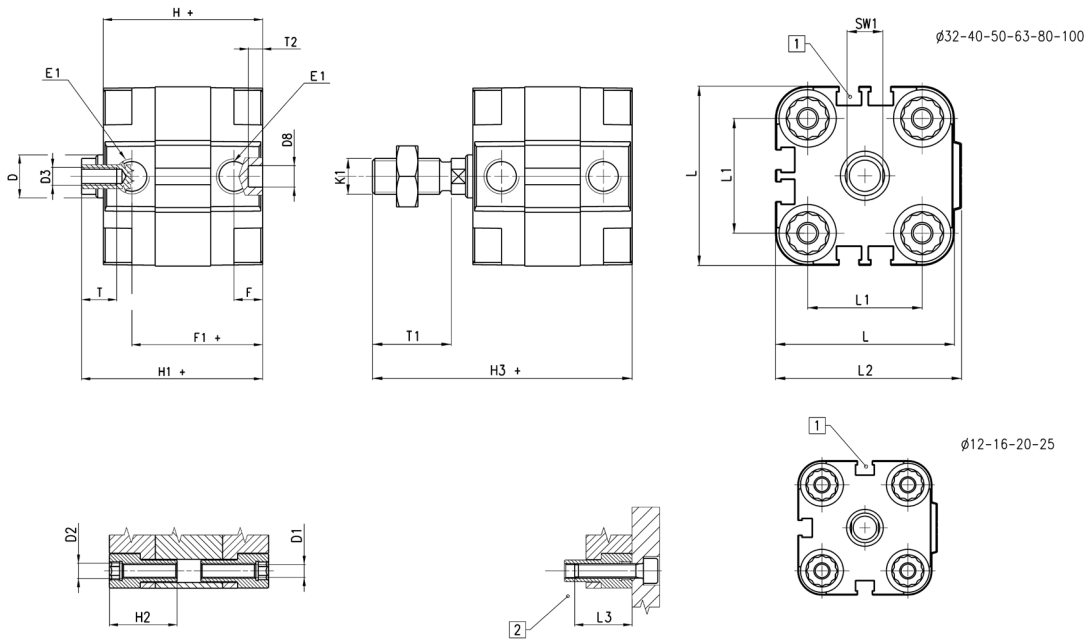

1 = Groove for sensor CST
2 = Keep to the minimum screwing depth.
+ = add the stroke

Ø	øD	øD1	D2	D3	øD8(H9)	E1	F	F1+	H+	H1+	H2	H3 +	K1	L	L1	L2	L3	T	T1	T2	SW1
12	6	3,5	M4	M3	6	M5	8	30	38	42,5	18,5	58,5	M6	29	18	30	16	6	16	4	5
16	8	3,5	M4	M4	6	M5	8	30	38	42,5	18,5	62,5	M8	29	18	30	16	8	20	4	7
20	10	4,5	M5	M5	6	M5	8	30	38	42,5	18,5	64,5	M10x1,25	36	22	37,5	18	10	22	4	8
25	10	4,5	M5	M5	6	M5	8	31,5	39,5	45	18,5	67	M10x1,25	40	26	41,5	18	10	22	4	8
32	12	5,5	M6	M6	6	G1\8	8	36,5	44,5	50,5	21,5	72,5	M10x1,25	50	32	52	20	12	22	4	10
40	12	5,5	M6	M6	6	G1\8	8	37,5	45,5	52	21,5	74	M10x1,25	60	42	62,5	20	12	22	4	10
50	16	6,5	M8	M8	6	G1\8	8	37,5	45,5	53	22,5	77	M12x1,25	68	50	71	20	12	24	4	13
63	16	8,5	M10	M8	8	G1\8	8	42	50	57,5	24,5	81,5	M12x1,25	87	62	91	25	12	24	4	13
80	20	8,5	M10	M10	8	G1\8	8,5	47,5	56	64	24,5	96	M16x1,5	107	82	111	25	16	32	4	17
100	25	8,5	M10	M12	8	G1\4	10,5	56	66,5	76,5	31,5	116,5	M20x1,5	128	103	133	25	20	40	4	22

Products designed for industrial applications. General terms and conditions for sale are available on www.camozzi.com
This document contains a description of the products offered by Camozzi Automation at time of publication.
For more complete and up to date information about the Camozzi Automation product range, please refer to our online catalogue at https://shop.camozzi.com

PNEUMATIC ACTUATION

1

Compact magnetic cylinders Mod. 31F and 31M - through-rod

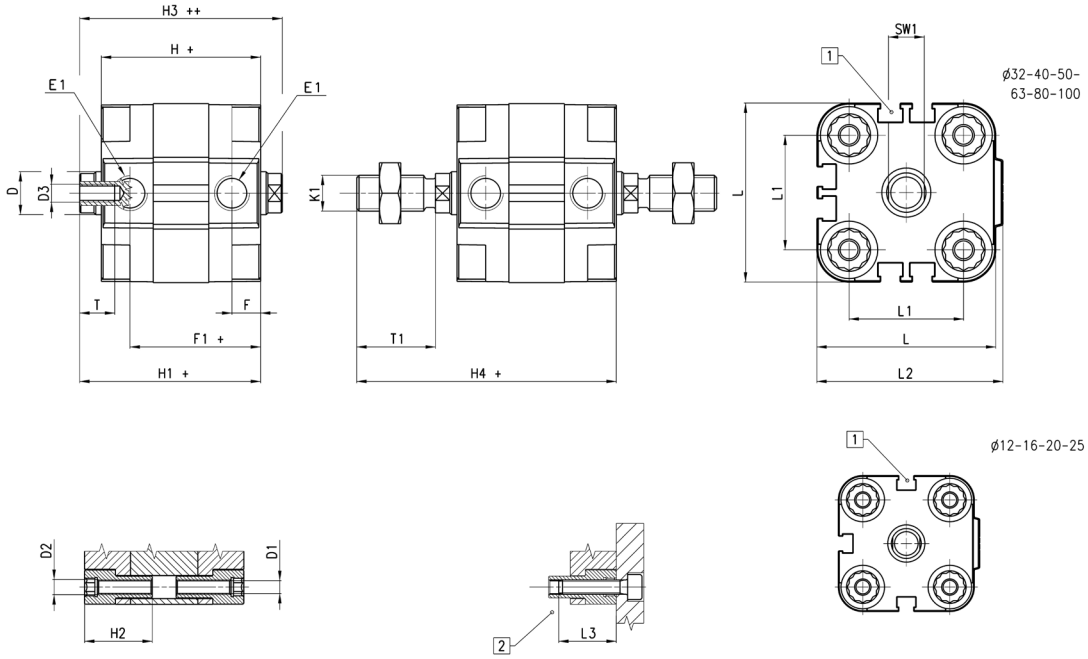

1 = Groove for sensor CST
2 = Keep to the minimum screwing depth.
+ = add the stroke once
++ = add the stroke twice

Ø	øD	øD1	D2	D3	E1	F	F1+	H+	H1+	H2	H3++	H4 +	K1	L	L1	L2	L3	T	T1	SW1
12	6	3,5	M4	M3	M5	8	30	38	42,5	18,5	47	58,5	M6	29	18	30	16	6	16	5
16	8	3,5	M4	M4	M5	8	30	38	42,5	18,5	47	62,5	M8	29	18	30	16	8	20	7
20	10	4,5	M5	M5	M5	8	30	38	42,5	18,5	47	64,5	M10x1,25	36	22	37,5	18	10	22	8
25	10	4,5	M5	M5	M5	8	31,5	39,5	45	18,5	50,5	67	M10x1,25	40	26	41,5	18	10	22	8
32	12	5,5	M6	M6	G1\8	8	36,5	44,5	50,5	21,5	56,5	72,5	M10x1,25	50	32	52	20	12	22	10
40	12	5,5	M6	M6	G1\8	8	37,5	45,5	52	21,5	58,5	74	M10x1,25	60	42	62,5	20	12	22	10
50	16	6,5	M8	M8	G1\8	8	37,5	45,5	53	22,5	60,5	77	M12x1,25	68	50	71	20	12	24	13
63	16	8,5	M10	M8	G1\8	8	42	50	57,5	24,5	65	81,5	M12x1,25	87	62	91	25	12	24	13
80	20	8,5	M10	M10	G1\8	8,5	47,5	56	64	24,5	72	96	M16x1,5	107	82	111	25	16	32	17
100	25	8,5	M10	M12	G1\4	10,5	56	66,5	76,5	31,5	86,5	116,5	M20x1,5	128	103	133	25	20	40	22

Products designed for industrial applications. General terms and conditions for sale are available on www.camozzi.com
This document contains a description of the products offered by Camozzi Automation at time of publication.
For more complete and up to date information about the Camozzi Automation product range, please refer to our online catalogue at https://shop.camozzi.com

Compact magnetic cylinders Mod. 31R

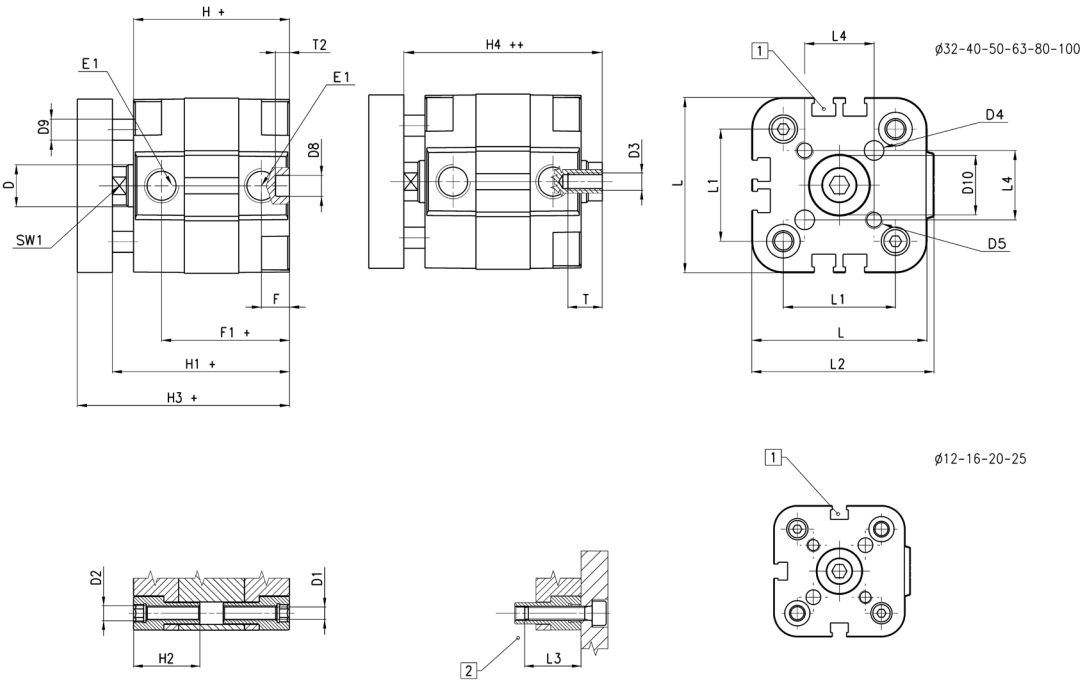

1 = Groove for sensor CST
2 = Keep to the minimum screwing depth.
+ = add the stroke once
++ = add the stroke twice

Ø	øD	øD1	D2	D3	øD4(H9)	D5	D8(H9)	øD9	D10	E1	F	F1+	H+	H1+	H2	H3 +	H4 ++	L	L1	L2	L3	L4	T	T2	SW1
12	6	3,5	M4	M3	3	M3	6	5	6	M5	8	30	38	42,5	18,5	48,5	47	29	18	30	16	9,9	6	4	5
16	8	3,5	M4	M4	3	M3	6	5	8	M5	8	30	38	42,5	18,5	48,5	47	29	18	30	16	9,9	8	4	7
20	10	4,5	M5	M5	4	M4	6	6	10	M5	8	30	38	42,5	18,5	50,5	47	36	22	37,5	18	12	10	4	8
25	10	4,5	M5	M5	5	M5	6	6	14	M5	8	31,5	39,5	45	18,5	53	50,5	40	26	41,5	18	15,6	10	4	8
32	12	5,5	M6	M6	5	M5	6	6	17	G1\8	8	36,5	44,5	50,5	21,5	60,5	56,5	50	32	52	20	19,8	12	4	10
40	12	5,5	M6	M6	5	M5	6	6	17	G1\8	8	37,5	45,5	52	21,5	62	58,5	60	42	62,5	20	23,3	12	4	10
50	16	6,5	M8	M8	6	M6	6	10	22	G1\8	8	37,5	45,5	53	22,5	65	60,5	68	50	71	20	29,7	12	4	13
63	16	8,5	M10	M8	6	M6	8	10	22	G1\8	8	42	50	57,5	24,5	69,5	65	87	62	91	25	35,4	12	4	13
80	20	8,5	M10	M10	8	M8	8	12	28	G1\8	8,5	47,5	56	64	24,5	78	72	107	82	111	25	46	16	4	17
100	25	8,5	M10	M12	10	M10	8	12	30	G1\4	10,5	56	66,5	76,5	31,5	90,5	86,5	128	103	133	25	56,6	20	4	22

COMPACT CYLINDERS
SERIES 31 - ACCESSORIES

Foot mount Mod. B

Material:
zinc-plated steel

Supplied with:
2x feet
4x screws

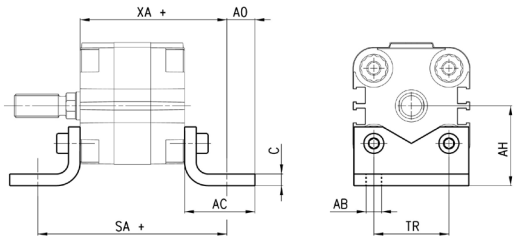

+ = add the stroke

Mod.	Ø	C	SA +	XA +	TR	øAB	AH	AO	AC
B-31-12-16	12 - 16	3	64	51	18	5,5	22	7	20
B-32-20	20	4	70	54	22	6,6	27	9	25
B-31-25	25	4	71,5	55,5	26	6,6	29	9	25
B-31-32	32	5	80,5	62,5	32	6,6	34	12	30
B-31-40	40	5	85,5	65,5	42	9	40,5	10	30
B-31-50	50	5,5	93,5	69,5	50	9	47	11	35
B-31-63	63	5,5	104	77	62	11	56,6	13	40
B-31-80	80	7,5	116	86	82	11	68,5	15	45
B-31-100	100	7,5	132,5	99,5	103	13,5	81	12	45

Front flange Mod. D-E

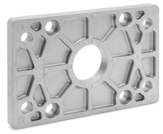

Front and rear
Material:
zinc-plated steel

Supplied with:
1x flange
4x screws

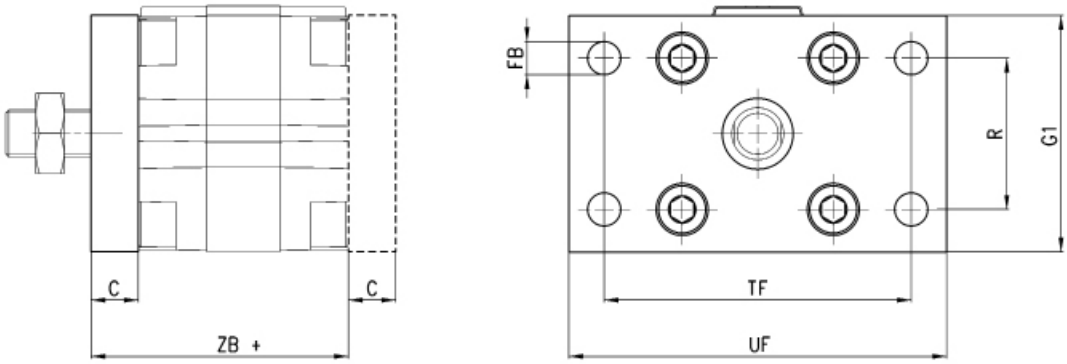

+ = add the stroke

Mod.	Ø	C	ZB +	TF	R	UF	G1	øFB
D-E-31-12-16	12 - 16	10	48	43	-	55	29	5,5
D-E-32-20	20	10	48	55	-	70	36	6,6
D-E-32-25	25	10	49,5	60	-	76	40	6,6
D-E-31-32	32	10	54,5	65	32	80	50	7
D-E-31-40	40	10	55,5	82	36	102	60	9
D-E-31-50	50	12	57,5	90	45	110	68	9
D-E-31-63	63	15	65	110	50	130	87	9
D-E-31-80	80	15	71	135	63	160	107	12
D-E-31-100	100	15	81,5	163	75	190	128	14

Products designed for industrial applications. General terms and conditions for sale are available on www.camozzi.com
This document contains a description of the products offered by Camozzi Automation at time of publication.
For more complete and up to date information about the Camozzi Automation product range, please refer to our online catalogue at https://shop.camozzi.com

Rear female trunnion Mod. C

Material:
aluminium

Supplied with:
4x screws
1x clevis pin
1x centering pin
1x trunnion

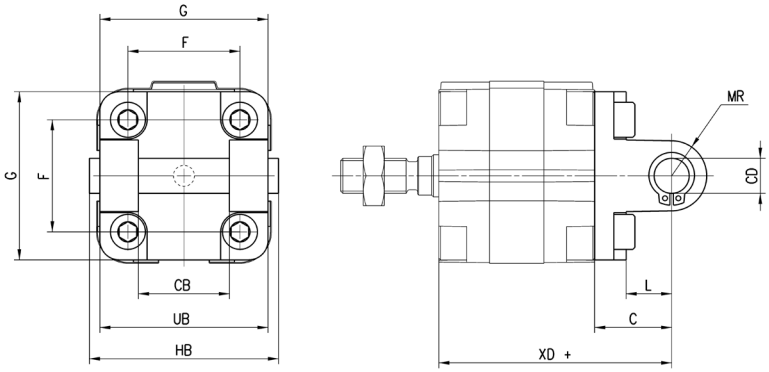

+ = add the stroke

Mod.	Ø	ØCD	L	C	XD +	MR	F	G	CB	UB	HB
C-31-32	32	10	13	21	66,5	11	32	50	26	45	54
C-31-40	40	12	16	25	70,5	13	42	60	28	52	62
C-31-50	50	12	16	27	72,5	13	50	68	32	60	70
C-31-63	63	16	21	32	82	17	62	87	40	70	82
C-31-80	80	16	23	36	92	17	82	102	50	90	102
C-31-100	100	20	26	41	107,5	21	103	128	60	110	126

Intermediate bracket Mod. DC

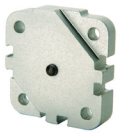

Material:
aluminium

Supplied with:
1x flange
1x centering pin
4x screws

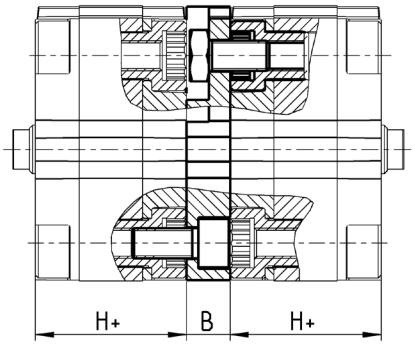

+ = add the stroke

Mod.	Ø	B	H	Max stroke (mm)
DC-31-12-16	12-16	12,5	38	400
DC-31-20	20	12,5	38	400
DC-31-25	25	13	39,5	400
DC-31-32	32	14,5	44,5	600
DC-31-40	40	14,5	45,5	600
DC-31-50	50	14,5	45,5	600
DC-31-63	63	14,5	50	600
DC-31-80	80	16,5	56	800
DC-31-100	100	19,5	66,5	800

Products designed for industrial applications. General terms and conditions for sale are available on www.camozzi.com
This document contains a description of the products offered by Camozzi Automation at time of publication.
For more complete and up to date information about the Camozzi Automation product range, please refer to our online catalogue at https://shop.camozzi.com

90° Swivel combination for female trunnion Mod. ZC

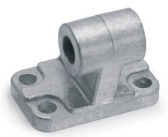

Male rear
Material:
aluminium

Supplied with:
1x male support

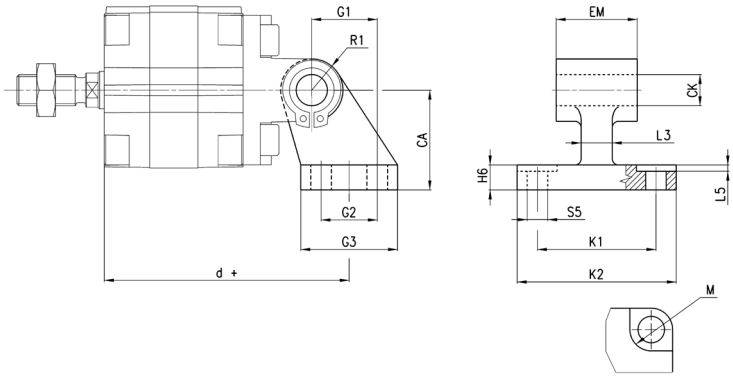

+ = add the stroke

Mod.	Ø	M	øCK	øS5	d +	K1	K2	L3	G1	L5	G2	EM	G3*	CA	H6	R1
ZC-32	32	11	10	6,6	78,5	38	51	10	21	1,6	18	26	31	32	8	10
ZC-40	40	11	12	6,6	83,5	41	54	15	24	1,6	22	28	35	36	10	11
ZC-50	50	15	12	9	90,5	50	65	16	33	1,6	30	32	45	45	12	13
ZC-63	63	15	16	9	101,5	52	67	16	37	1,6	35	40	50	50	14	15
ZC-80	80	18	16	11	119	66	86	20	47	2,5	40	50	60	63	14	15
ZC-100	100	18	20	11	137,5	76	96	20	55	3,2	50	60	70	71	17	19

90° swivel combination for trunnion Mod. I

Material:
zinc-plated steel

Supplied with:
2x Seeger
1x female support
1x piston pin

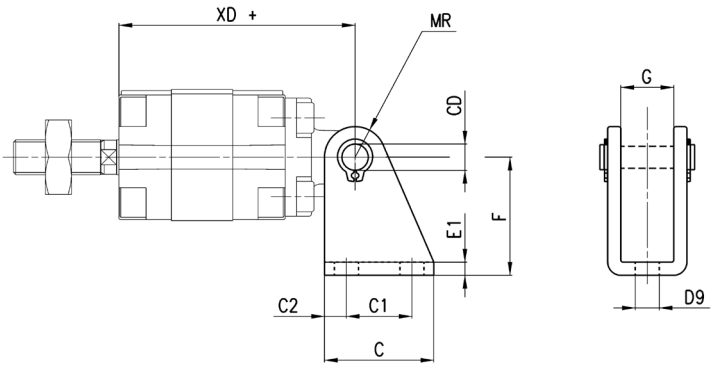

+ = add the stroke

Mod.	Ø	øCD	C	C1	øC2	XD +	MR	øD9	E1	F	G
I-12-16	12	6	25	15	5	54	7	5,5	3	27	12,1
I-12-16	16	6	25	15	5	54	7	5,5	3	27	12,1
I-20-25	20	8	32	20	6	58	10	6	4	30	16,1
I-20-25	25	8	32	20	6	59,5	10	6	4	30	16,1

Products designed for industrial applications. General terms and conditions for sale are available on www.camozzi.com
This document contains a description of the products offered by Camozzi Automation at time of publication.
For more complete and up to date information about the Camozzi Automation product range, please refer to our online catalogue at https://shop.camozzi.com

Rear male trunnion Mod. L

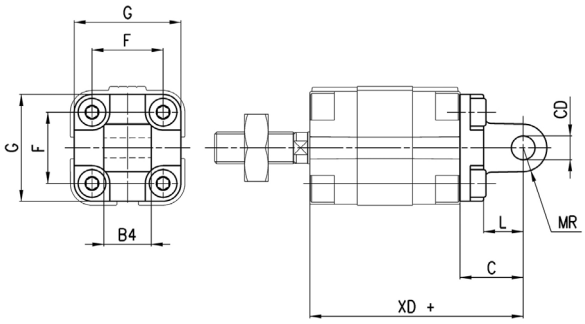

Material:
aluminium

Supplied with:
4x screws
1x male trunnion
1x centering pin

Mod.	Ø	øCD	L	C	XD +	MR	F	G	B4
L-31-12-16	12	6	10	16	54	6	18	30	12
L-31-12-16	16	6	10	16	54	6	18	30	12
L-31-20	20	8	14	20	58	8	22	37,5	16
L-31-25	25	8	14	20	59,5	8	26	41,5	16

+ = add the stroke

Piston rod lock nut Mod. U

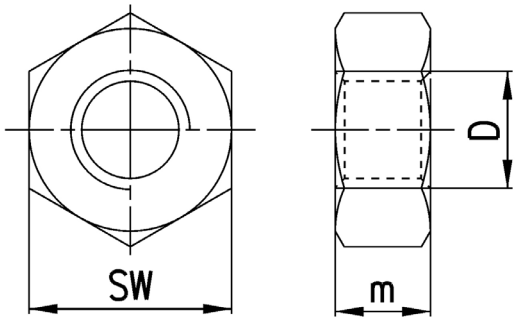

ISO 4035

Material:
zinc-plated steel

Mod.	Ø	D	m	SW
U-12-16	12	M6x1	4	10
U-20	16	M8x1,25	5	13
U-25-32	20-40	M10x1,25	6	17
U-40	50-63	M12x1,25	7	19
U-50-63	80	M16x1,5	8	24
U-80-100	100	M20x1,5	9	30

Swivel ball joint Mod. GA

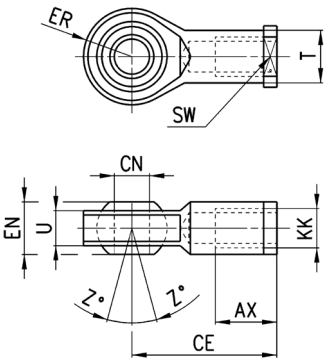

ISO 8139

Material:
zinc-plated steel

Mod.	Ø	øCN	U	EN	ER	AX	CE	KK	øT	Z	SW
GA-12-16	12	6	7	9	10	12	30	M6x1	10	6,5	11
GA-20	16	8	9	12	12	16	36	M8x1,25	12,5	6,5	14
GA-32	20÷40	10	10,5	14	14	20	43	M10x1,25	15	6,5	17
GA-40	50÷63	12	12	16	16	22	50	M12x1,25	17,5	6,5	19
GA-50-63	80	16	15	21	21	28	64	M16x1,5	22	7,5	22
GA-80-100	100	20	18	25	25	33	77	M20x1,5	27,5	7	30

COMPACT CYLINDERS
SERIES 31 - ACCESSORIES

Rod fork end Mod. G

ISO 8140

Material:
zinc-plated steel

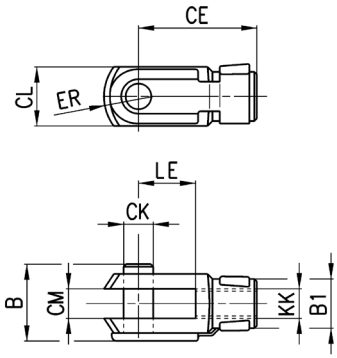

Mod.	Ø	B	øB1	øCK	LE	CM	CL	ER	CE	KK
G-12-16	12	16	10	6	12	6	12	7	24	M6x1
G-20	16	22	14	8	16	8	16	42	32	M8x1,25
G-25-32	20 ÷ 40	26	18	10	20	10	20	12	40	M10x1,25
G-40	50 ÷ 63	32	20	12	24	12	24	14	48	M12x1,25
G-50-63	80	40	26	16	32	16	32	19	64	M16x1,5
G-80-100	100	48	34	20	40	20	40	25	80	M20x1,5

Piston rod socket joint Mod. GY

Material:
zama and zinc-plated steel

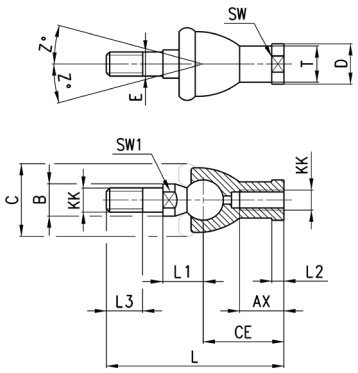

Mod.	Ø	KK	L	CE	L2	AX	E	B	C	T	D	L1	L3	SW1	SW	Z
GY-12-16	12	M6x1	55	28	5	15	6	10	20	10	13	12,2	11	8	11	15
GY-20	16	M8x1,25	65	32	5	16	8	12	24	12,5	16	16	12	10	14	15
GY-32	20÷40	M10x1,25	74	35	6,5	18	10	14	28	15	19	19,5	15	11	17	15
GY-40	50÷63	M12x1,25	84	40	6,5	20	12	19	32	17,5	22	21	17	17	19	15
GY-50-63	80	M16x1,5	112	50	8	27	16	22	40	22	27	27,5	23	19	22	11
GY-80-100	100	M20x1,5	133	63	10	38	20	27	45	27,5	34	31,5	25	24	30	7,5

Products designed for industrial applications. General terms and conditions for sale are available on www.camozzi.com
This document contains a description of the products offered by Camozzi Automation at time of publication.
For more complete and up to date information about the Camozzi Automation product range, please refer to our online catalogue at https://shop.camozzi.com

Self aligning rod Mod. GK

For cylinders with male rod only.

Material:
zinc-plated steel

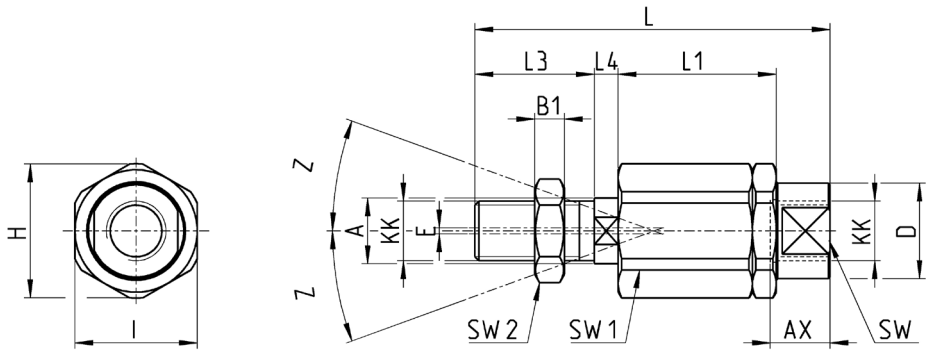

Mod.	Ø	KK	L	L1	L3	L4	ØA	Ø D	H	I	SW	SW1	SW2	B1	AX	Z	E
GK-20	16	M8x1,25	57	26	21	5	8	12,5	19	17	11	7	13	4	16	4	2
GK-25-32	20-25-32-40	M10x1,25	71,5	35	20	7,5	14	22	32	30	19	12	17	5	22	4	2
GK-40	50-63	M12x1,25	75,5	35	24	7,5	14	22	32	30	19	12	19	6	22	4	2
GK-50-63	80	M16x1,5	104	53	32	10	22	32	45	41	27	20	24	8	30	3	2
GK-80-100	100	M20x1,5	119	53	40	10	22	32	45	41	27	20	30	10	37	3	2

Coupling piece Mod. GKF

Material:
zinc-plated steel

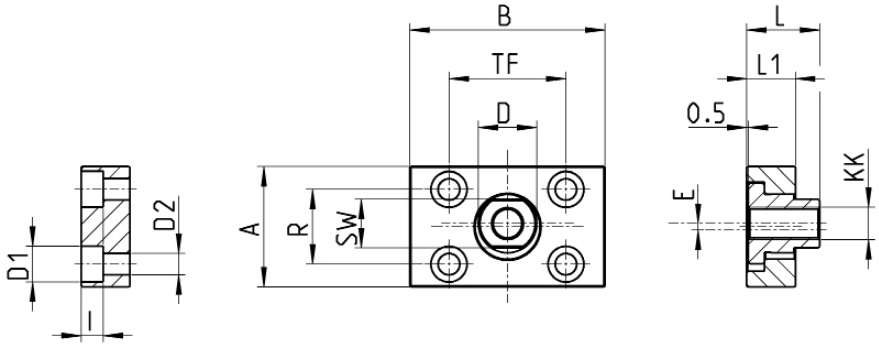

Mod.	Ø	KK	A	B	R	TF	L	L1	I	øD		øD2	SW	E
GKF-20	16	M8x1,25	30	35	20	25	22,5	10	-	14	5,5	-	13	1,5
GKF-25-32	20-25-32-40	M10x1,25	37	60	23	36	22,5	15	6,8	18	11	6,6	15	2
GKF-40	50-63	M12x1,25	56	60	38	42	22,5	15	9	20	15	9	15	2,5
GKF-50-63	80	M16x1,5	80	80	58	58	26,5	15	10,5	25	18	11	22	2,5
GKF-80-100	100	M20x1,5	90	90	65	65	32,5	20	13	30,5	20	14	27	2,5

Magnetic proximity switches with 2 or 3 wire cable for T-slot

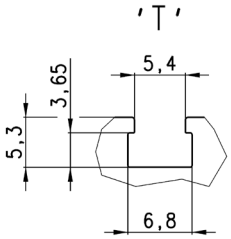

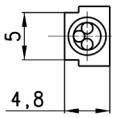

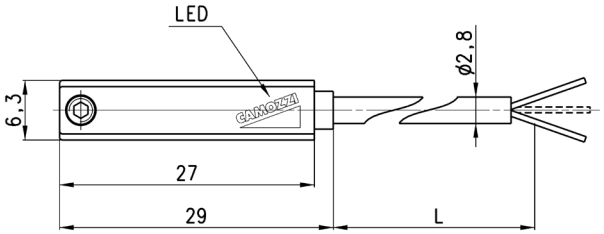

Mod.	Operation	Connections	Voltage	Output	Max. current	Max Load	Protection	L = length cable
CST-220	Reed	2 wires	10 ÷ 110 V AC/DC-230 V AC	-	250 mA	10 VA / 8W	None	2 m
CST-220-5	Reed	2 wires	10 ÷ 110 V AC/DC-230 V AC	-	250 mA	10 VA / 8 W	None	5 m
CST-220-12	Reed	2 wires	10 ÷ 110 V AC/DC-230 V AC	-	250 mA	10 VA / 8W	None	12 m
CST-220EX	Reed	2 wires	10 ÷ 110 V AC/DC-230 V AC	-	250 mA	10 VA / 8W	None	2 m
CST-220-5EX	Reed	2 wires	10 ÷ 110 V AC/DC-230 V AC	-	250 mA	10 VA / 8W	None	5 m
CST-220-12EX	Reed	2 wires	10 ÷ 110 V AC/DC-230 V AC	-	250 mA	10 VA / 8W	None	12 m
CST-232	Reed	3 wires	5 ÷ 30 V AC/DC	PNP	250 mA	10 VA / 8 W	Against polarity reversing	2 m
CST-232-5	Reed	3 wires	5 ÷ 30 V AC/DC	PNP	250 mA	10 VA / 8 W	Against polarity reversing	5 m
CST-232EX	Reed	3 wires	5 ÷ 30 V AC/DC	PNP	250 mA	10 VA / 8W	Against polarity reversing	2 m
CST-232-5EX	Reed	3 wires	5 ÷ 30 V AC/DC	PNP	250 mA	10 VA / 8W	Against polarity reversing and overvoltage	5 m
CST-332	Magnetoresistive	3 wires	10 ÷ 27 V DC	PNP	100 mA	6 W	Against polarity reversing and overvoltage	2 m
CST-332-5	Magnetoresistive	3 wires	10 ÷ 27 V DC	PNP	100 mA	6 W	Against polarity reversing and overvoltage	5 m
CST-332EX	Magnetoresistive	3 wires	10 ÷ 27 V DC	PNP	100 mA	6 W	Against polarity reversing and overvoltage	2 m
CST-332-5EX	Magnetoresistive	3 wires	10 ÷ 27 V DC	PNP	100 mA	6 W	Against polarity reversing and overvoltage	5 m
CST-432	Reed	3 wires	5 ÷ 30 V AC/DC	PNP-NC	250 mA	10 VA / 8 W	Against polarity reversing	2 m
CST-432-5	Reed	3 wires	5 ÷ 30 V AC/DC	PNP-NC	250 mA	10 VA / 8 W	Against polarity reversing	5 m
CST-432EX	Reed	3 wires	5 ÷ 30 V AC/DC	PNP-NC	250 mA	10 VA / 8 W	Against polarity reversing	2 m
CST-432-5EX	Reed	3 wires	5 ÷ 30 V AC/DC	PNP-NC	250 mA	10 VA / 8 W	Against polarity reversing	5 m
CST-532	Hall effect	3 wires	10 ÷ 27 V DC	PNP	100 mA	6 W	Against polarity reversing and overvoltage	2 m
CST-532-5	Hall effect	3 wires	10 ÷ 27 V DC	PNP	100 mA	6 W	Against polarity reversing and overvoltage	5 m
CST-532EX	Hall effect	3 wires	10 ÷ 27 V DC	PNP	100 mA	6 W	Against polarity reversing and overvoltage	2 m
CST-532-5EX	Hall effect	3 wires	10 ÷ 27 V DC	PNP	100 mA	6 W	Against polarity reversing and overvoltage	5 m

Note for 2-wire switches Mod. CST-220, CST-220-5:
in case of polarity reversing the sensor will still be operating, but the LED diode won't turn on.

Products designed for industrial applications. General terms and conditions for sale are available on www.camozzi.com
This document contains a description of the products offered by Camozzi Automation at time of publication.
For more complete and up to date information about the Camozzi Automation product range, please refer to our online catalogue at https://shop.camozzi.com

Magnetic proximity switches with M8 3-pin connector for T-slot

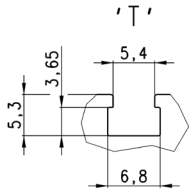

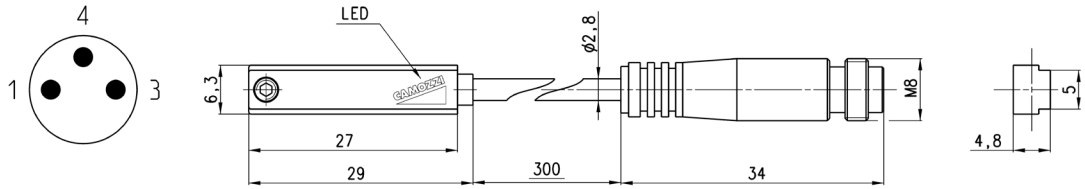

Cable length: 0,3 m

Mod.	Operation	Connection	Voltage	Output	Max. current	Max Load	Protection
CST-250N	Reed	2 wires M8 male 3 pin	10 ÷ 110 V AC/DC	-	250 mA	10 VA / 8 W	None
CST-250NEX	Reed	2 wires M8 male 3 pin	10 ÷ 110 V AC/DC	-	250 mA	10 VA / 8 W	None
CST-262	Reed	3 wires M8 male 3 pin	5 ÷ 30 V AC/DC	PNP	250 mA	10 VA / 8 W	Against polarity reversing
CST-262EX	Reed	3 wires M8 male 3 pin	5 ÷ 30 V AC/DC	PNP	250 mA	10 VA / 8 W	Against polarity reversing
CST-362	Magnetoresistive	3 wires M8 male 3 pin	10 ÷ 27 V DC	PNP	100 mA	6 W	Against polarity reversing and overvoltage
CST-362EX	Magnetoresistive	3 wires M8 male 3 pin	10 ÷ 27 V DC	PNP	100 mA	6 W	Against polarity reversing and overvoltage
CST-562	Hall effect	3 wires M8 male 3 pin	10 ÷ 27 V DC	PNP	100 mA	6 W	Against polarity reversing and overvoltage
CST-562EX	Hall effect	3 wiresM8 male 3 pin	10 ÷ 27 V DC	PNP	100 mA	6 W	Against polarity reversing and overvoltage

Note for 2-wire switch Mod. CST-250N:
in case of polarity reversing the sensor will still be operating, but the LED diode won't turn on.

Magnetic proximity switches with 2 or 3 wire cable for H-slot

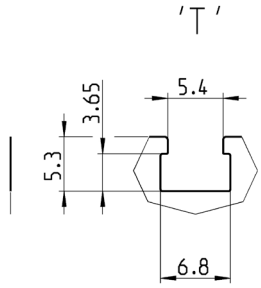

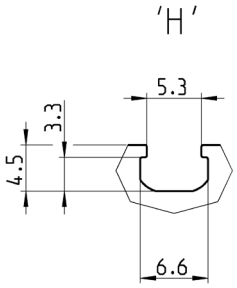

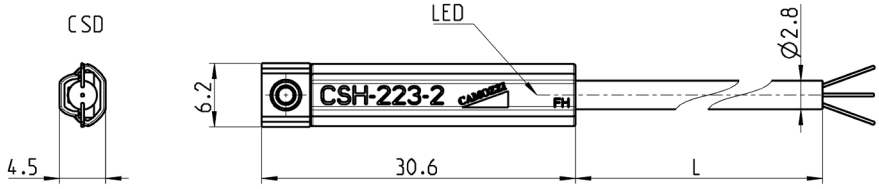

Mod.	Operation	Connection	Voltage	Output	Max. current	Max Load	Protection	L = cable legth
CSH-223-2	Reed	2 wires	10 ÷ 30 V AC/DC	-	250 mA	10 VA / 8 W	Against polarity reversing	2 m
CSH-223-5	Reed	2 wires	10 ÷ 30 V AC/DC	-	250 mA	10 VA / 8 W	Against polarity reversing	5 m
CSH-223-10	Reed	2 wires	10 ÷ 30 V AC/DC	-	250 mA	10 VA / 8 W	Against polarity reversing and overvoltage	10 m
CSH-223-2EX	Reed	2 wires	10 ÷ 30 V AC/DC	-	250 mA	10 VA / 8 W	Against polarity reversing and overvoltage	2 m
CSH-223-5EX	Reed	2 wires	10 ÷ 30 V AC/DC	-	250 mA	10 VA / 8 W	Against polarity reversing	5 m
CSH-223-10EX	Reed	2 wires	10 ÷ 30 V AC/DC	-	250 mA	10 VA / 8 W	Against polarity reversing	10 m
CSH-221-2	Reed	2 wires	30 ÷ 230 V AC - 30 ÷ 110 V DC	-	250 mA	10 VA / 8 W	Against polarity reversing	2 m
CSH-221-5	Reed	2 wires	30 ÷ 230 V AC - 30 ÷ 110 V DC	-	250 mA	10 VA / 8 W	Against polarity reversing	5 m
CSH-221-2EX	Reed	2 wires	30 ÷ 230 V AC - 30 ÷ 110 V DC	-	250 mA	10 VA / 8 W	Against polarity reversing	2 m
CSH-221-5EX	Reed	2 wires	30 ÷ 230 V AC - 30 ÷ 110 V DC	-	250 mA	10 VA / 8 W	Against polarity reversing	5 m
CSH-233-2	Reed	3 wires	10 ÷ 30 V AC/DC	PNP	250 mA	10 VA / 8 W	Against polarity reversing	2 m
CSH-233-5	Reed	3 wires	10 ÷ 30 V AC/DC	PNP	250 mA	10 VA / 8 W	Against polarity reversing	5 m
CSH-233-2EX	Reed	3 wires	10 ÷ 30 V AC/DC	PNP	250 mA	10 VA / 8 W	Against polarity reversing	2 m
CSH-233-5EX	Reed	3 wires	10 ÷ 30 V AC/DC	PNP	250 mA	10 VA / 8 W	Against polarity reversing	5 m
CSH-334-2	Magnetoresistive	3 wires	10 ÷ 27 V DC	PNP	250 mA	6 W	Against polarity reversing and overvoltage	2 m
CSH-334-5	Magnetoresistive	3 wires	10 ÷ 27 V DC	PNP	250 mA	6 W	Against polarity reversing and overvoltage	5 m
CSH-334-2EX	Magnetoresistive	3 wires	10 ÷ 27 V DC	PNP	250 mA	6 W	Against polarity reversing and overvoltage	2 m
CSH-334-5EX	Magnetoresistive	3 wires	10 ÷ 27 V DC	PNP	250 mA	6 W	Against polarity reversing and overvoltage	5 m
CSH-433-2	Reed NC	3 wires	10 ÷ 30 V AC/DC	PNP	250 mA	10 VA / 8 W	Against polarity reversing	2 m
CSH-433-5	Reed	3 wires	10 ÷ 30 V AC/DC	PNP-NC	250 mA	10 VA / 8 W	Against polarity reversing	5 m
CSH-433-2EX	Reed	3 wires	10 ÷ 30 V AC/DC	PNP-NC	250 mA	10 VA / 8 W	Against polarity reversing	2 m
CSH-433-5EX	Reed	3 wires	10 ÷ 30 V AC/DC-	PNP-NC	250 mA	10 VA / 8 W	Against polarity reversing	5 m

Note for 2-wire switches Mod. CSH-223-2, CSH-223-5, CSH-221-2, CSH-221-5:
in case of polarity reversing the sensor will still be operating, but the LED diode won't turn on.

Products designed for industrial applications. General terms and conditions for sale are available on www.camozzi.com
This document contains a description of the products offered by Camozzi Automation at time of publication.
For more complete and up to date information about the Camozzi Automation product range, please refer to our online catalogue at https://shop.camozzi.com

Magnetic proximity switches wtih M8 3-pin connector for H-slot

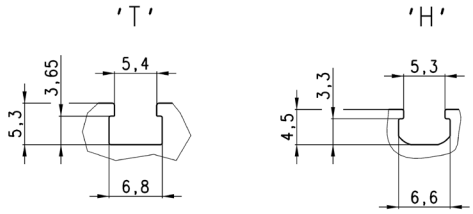

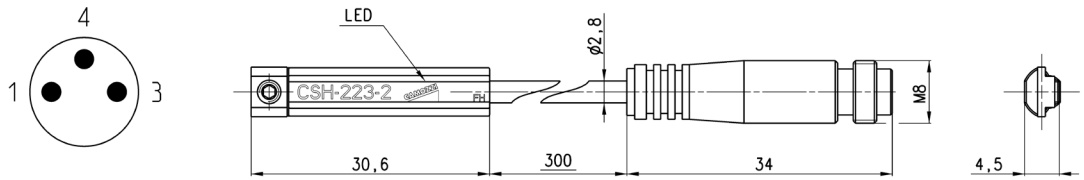

Cable length: 0,3 m

Mod.	Operation	Connection	Voltage	Output	Max. current	Max Load	Protection
CSH-253	Reed NO	2 wires M8 male 3 pin	10 ÷ 30 V AC/DC	-	250 mA	10 VA / 8 W	Against polarity reversing
CSH-253EX	Reed NO	2 wires M8 male 3 pin	10 ÷ 30 V AC/DC	-	250 mA	10 VA / 8 W	Against polarity reversing
CSH-263	Reed NO	3 wires M8 male 3 pin	10 ÷ 30 V AC/DC	PNP	250 mA	10 VA / 8 W	Against polarity reversing
CSH-263EX	Reed NO	3 wires M8 male 3 pin	10 ÷ 30 V AC/DC	PNP	250 mA	10 VA / 8 W	Against polarity reversing
CSH-364	Magnetoresistive	3 wires M8 male 3 pin	10 ÷ 27 V DC	PNP	250 mA	6 W	Against polarity reversing and overvoltage
CSH-364EX	Magnetoresistive	3 wires M8 male 3 pin	10 ÷ 27 V DC	PNP	250 mA	6 W	Against polarity reversing and overvoltage
CSH-463	Reed NC	3 wires M8 male 3 pin	10 ÷ 30 V AC/DC	PNP	250 mA	10 VA / 8 W	Against polarity reversing
CSH-463EX	Reed NC	3 wires M8 male 3 pin	10 ÷ 30 V AC/DC	PNP	250 mA	10 VA / 8 W	Against polarity reversing

Note for 2-wire switch Mod. CSH-253:
in case of polarity reversing the sensor will still be operating, but LED diode won't turn on.

Products designed for industrial applications. General terms and conditions for sale are available on www.camozzi.com
This document contains a description of the products offered by Camozzi Automation at time of publication.
For more complete and up to date information about the Camozzi Automation product range, please refer to our online catalogue at https://shop.camozzi.com