DATA SHEET

24/03/2016

Receiver	From
Society	
Reference	
Address	
Phone	
Fax	
E-mail	

Item n° :

103040130

Model :

FEKA VS 1200 M - NA

Pump data

Free passage :	50 mm
Pressure rating :	
Min. fluid temperature :	0
Max. fluid temperature :	50 °C
Max. Ambient temperature :	40 °C

Requested data

Flow :	0 m³/h
Head :	0 m
Fluid :	Water, pure
Fluid Temperature :	20 °C
Density :	998.3 kg/m³
Kinematic viscosity :	1.005 mm²/s
Vapor pressure :	100 kPa

Hydraulic data (duty point)

Flow :

Head :

Materials

Pump body	Stainless Steel (AISI 304)
Impeller	Stainless Steel (AISI 304)
Motor shaft	AISI 316
Seal disk	Stainless Steel (AISI 304)
Motor casing	Stainless Steel (AISI 304)
Protection cover	Stainless Steel (AISI 304)
Mechanical seal pump side	Silicon carbide/Silicon carbide

Curve tolerance according to ISO 9906

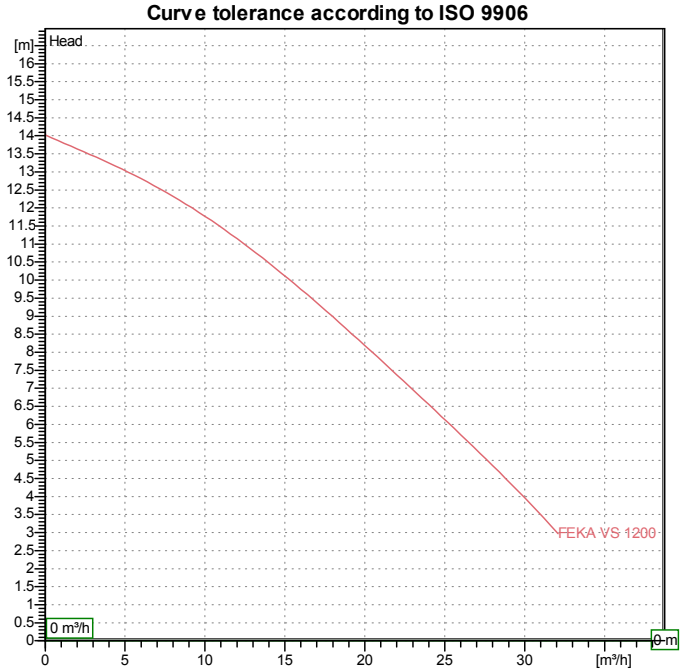

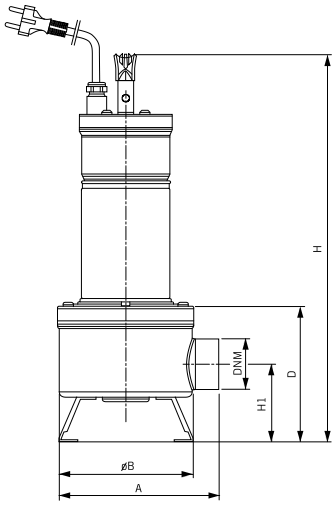

Motor data

Motor brand :	DAB	
Nominal power P2 :	1.2 kW	
Rated speed :	2800 rpm	
Rated voltage :	1~ 220-240 V	50 Hz
Nominal current :	8.63 A	
Degree of protection :	IP 68	

Weight : 20.8 kg

Dimensions in mm

A	203				
B	170				
D	172				
DNM	2" F				
H	537				
H1	98				

Pump connection

Suction side :		/
Discharge side :	2 " F	/ --

DAB PUMPS reserves the right to make modifications without notice

PERFORMANCE CURVES

24/03/2016

Receiver	From
Society Reference Address Phone Fax E-mail	

FEKA VS 1200 M - NA

Curve tolerance according to ISO 9906

Hydraulic data (duty point)

Suction side :	Discharge side :	Flow :	Head :	Rated speed :
	2 " F --	0 m³/h	0 m	2800 rpm

Project	Project ID	Created by	Created on
			24/03/2016

DAB PUMPS reserves the right to make modifications without notice

DIMENSIONAL DRAWING

24/03/2016

Receiver	From
Society Reference Address Phone Fax E-mail	

FEKA VS 1200 M - NA

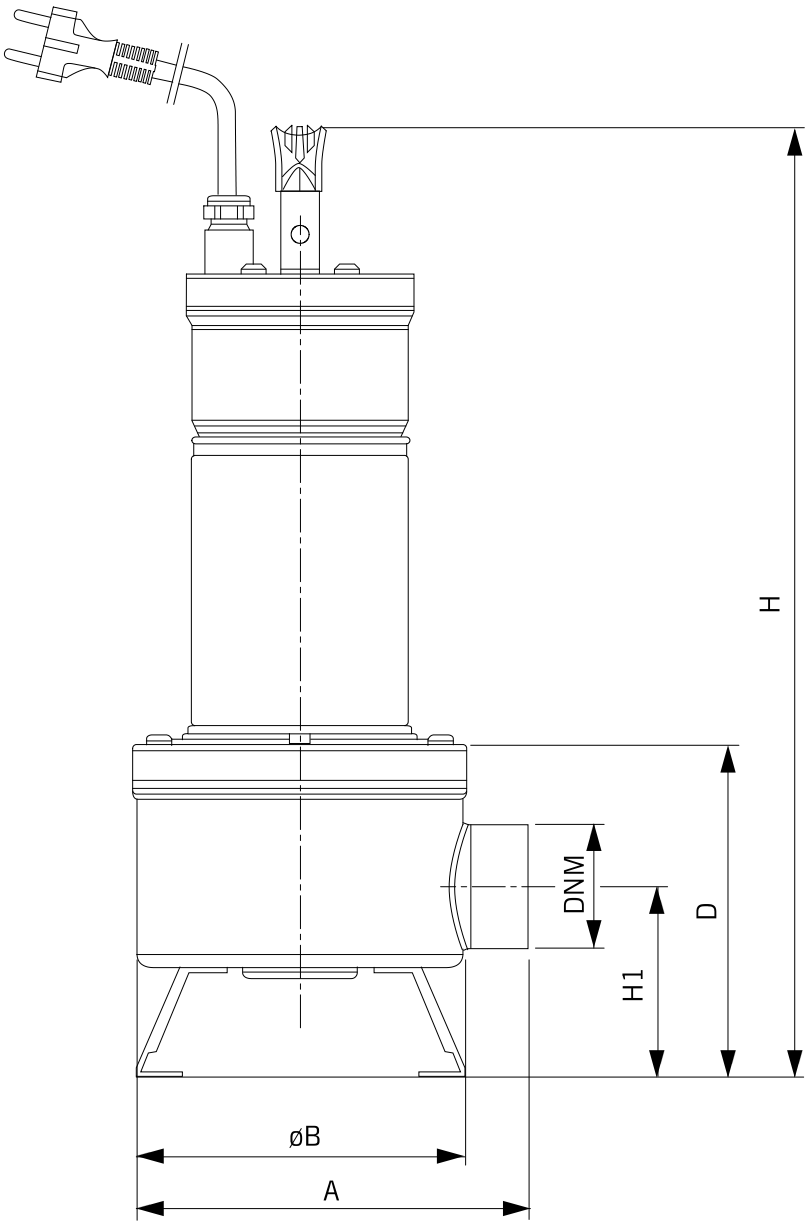

Dimensions in mm							Pump connection
1	A	203					Suction
2	B	170					
3	D	172					
4	DNM	2" F					
5	H	537					
6	H1	98					Discharge 2 " F --

Project	Project ID	Created by	Created on
			24/03/2016

DAB PUMPS reserves the right to make modifications without notice