Kawasaki ENGINES

FR Series

FR541V

Performance curves

The power rating of this engine is the Net power rating tested on a production engine and measured in accordance with SAE J1349.Actual power output will vary depending on numerous factors, including, but not limited to, the operating speed of the engine in application, environmental conditions, maintenance, and other variables.

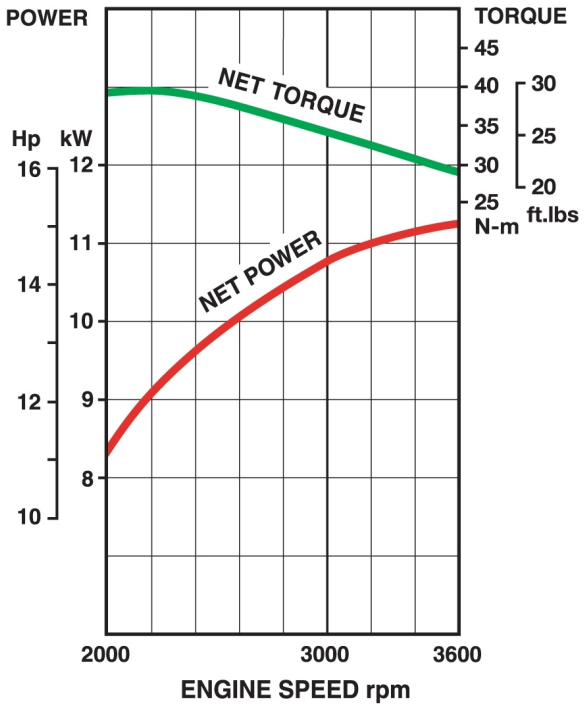

Type

- 4 Stroke
- Air Cooled
- V Twin
- Overhead valve
- Vertical Shaft

Technical Specifications

Engine Type	Air-cooled, 4-stroke, V-twin, Vertical shaft, OHV
Max. power	11.3 kW (15.1 hp) / 3600 rpm
Oil capacity (litres)	2.0 litres
Number of cylinders	2
Displacement	603 cm³
Dimensions (L x W x H) (mm)	482 x 429 x 370
Bore x stroke	73 x 72 mm
Fuel tank capacity (litres)	
Max. torque	39.1 Nm (28.8ft.lbs) / 2200 rpm
Dry weight	36.7 kg

Kawasaki ENGINES

Features

- Bendix type starter
- High performance lubrication system
- Cast iron cylinder liners
- Internally vented carburetor with fuel shut-off solenoid
- Automatic compression release
- 90 degree V-twin
- Electronic spark ignition
- Spherical combustion chamber
- Overhead V-valves
- Rotating grass screen

Options

- Shaft variations
- Various speed control system
- 13 or 20 Amp charge coil
- Various oil drains
- Oil pressure switches

Kawasaki ENGINES

FR Series
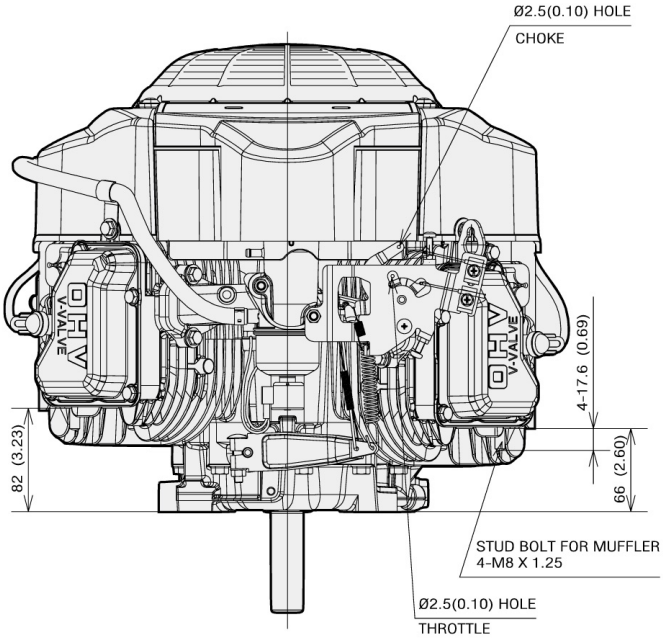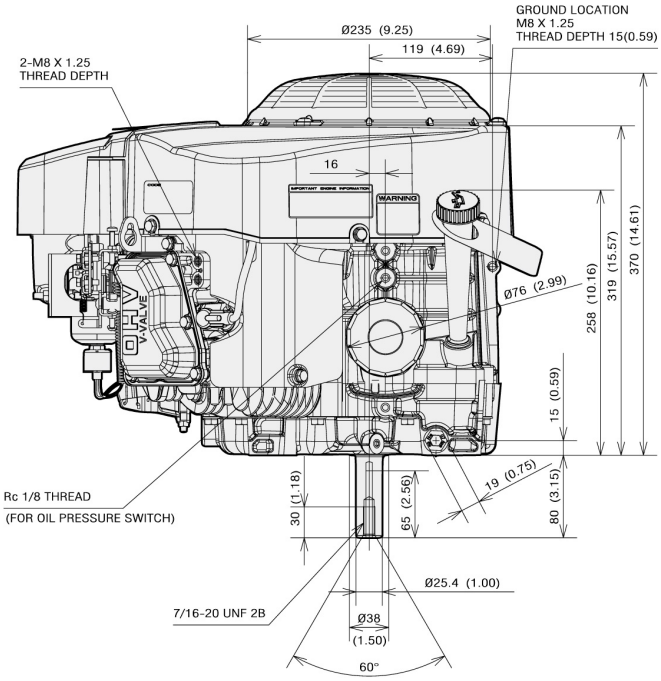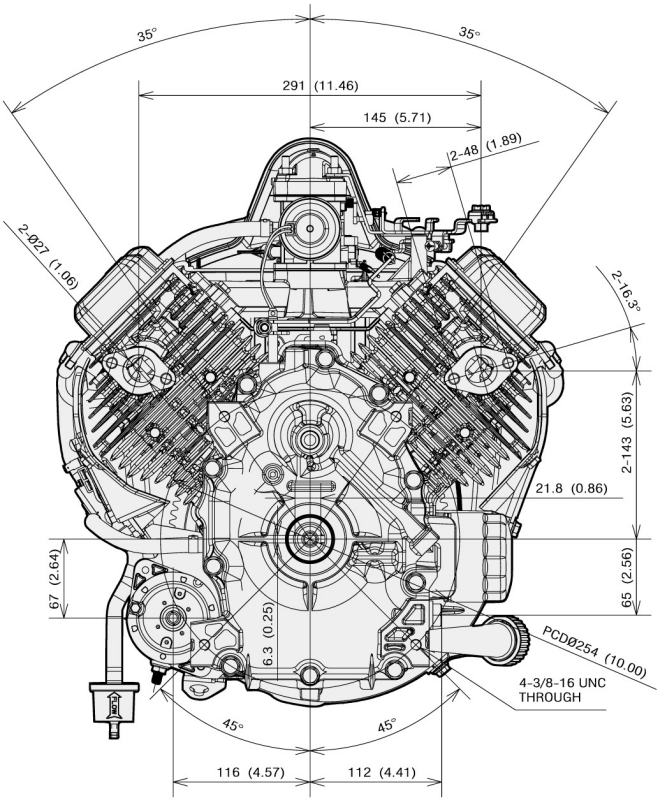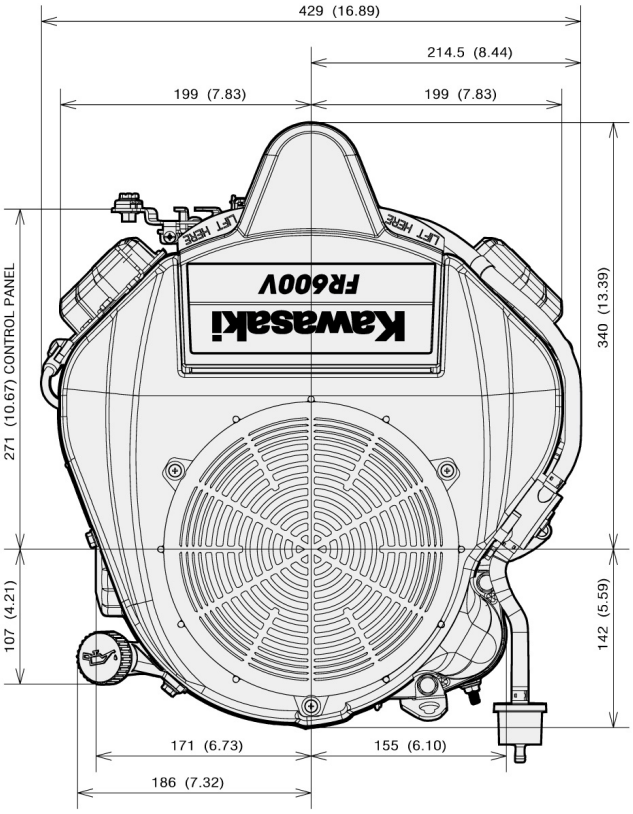
FR541V