DATA SHEET

24/03/2016

Receiver	From
Society	
Reference	
Address	
Phone	
Fax	
E-mail	

Item n° :

60118030

Model :

EUROSWIM 100 M

Pump data

Pressure rating :	2,5 bar (250 kPa)
Min. fluid temperature :	0 °C
Max. fluid temperature :	60 °C
Max. Ambient temperature :	50 °C

Requested data

Flow :	0.00 m³/h
Head :	0.00 m
Fluid :	Water, pure
Fluid Temperature :	20 °C
Density :	998.3 kg/m³
Kinematic viscosity :	1.005 mm²/s
Vapor pressure :	100.00 kPa

Hydraulic data (duty point)

Flow :	
Head :	

Materials

Pump body	Reinforced technopolymer
Impeller	Reinforced technopolymer
Diffuser	Reinforced technopolymer
Filter	Technopolymer
Mechanical seal	Carbon/Alumina/NBR/AISI316
Filter cover	Polycarbonate
O-ring	NBR

Motor data

Motor brand :	DAB
Nominal power P2 :	0.75 kW
Rated speed :	2900 rpm
Rated voltage :	1~ 220-240 V 50 Hz
Nominal current :	6.3 A
Degree of protection :	IP 55

Pump connection

Suction side :	2 " G	/ 2,5 bar (250 kPa)
Discharge side :	2 " G	/ 2,5 bar (250 kPa)

Curve tolerance according to ISO 9906

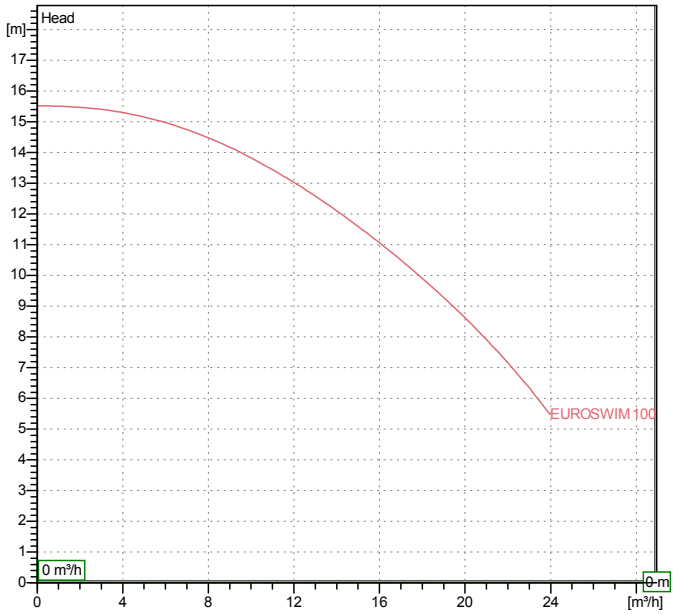

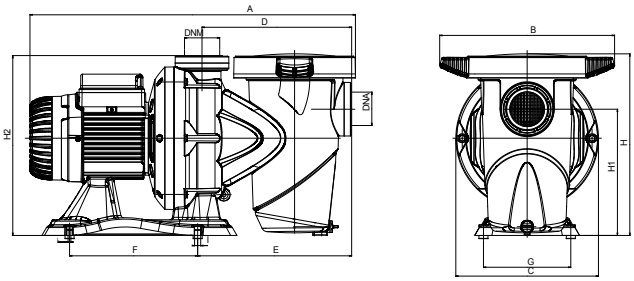

Weight : 13.8 kg

Dimensions in mm

A	559	I	11
B	300	L	6.5
C	245		
D	257		
DNA	G2"		
DNM	G2"		
E	265		
F	220		
G	150		
H	317		
H1	222		
H2	314		

DAB PUMPS reserves the right to make modifications without notice

PERFORMANCE CURVES

24/03/2016

Receiver	From
Society Reference Address Phone Fax E-mail	

EUROSWIM 100 M

Curve tolerance according to ISO 9906

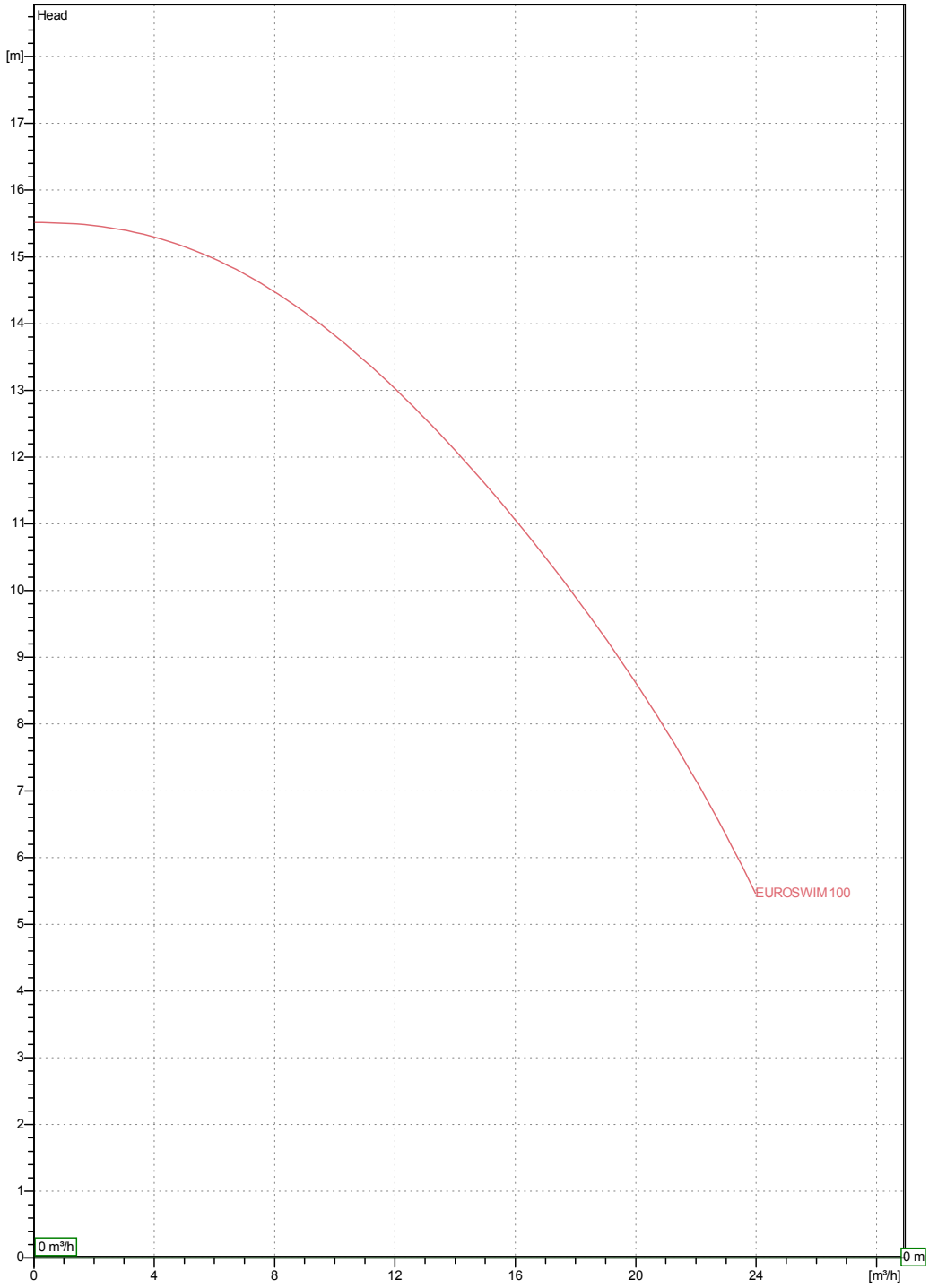

Hydraulic data (duty point)

Suction side :	Discharge side :	Flow :	Head :	Rated speed :
2 " G 2,5 bar (250 kPa)	2 " G 2,5 bar (250 kPa)	0 m³/h	0 m	2900 rpm

Project	Project ID	Created by	Created on
			24/03/2016

DAB PUMPS reserves the right to make modifications without notice

DIMENSIONAL DRAWING

24/03/2016

Receiver	From
Society Reference Address Phone Fax E-mail	

EUROSWIM 100 M

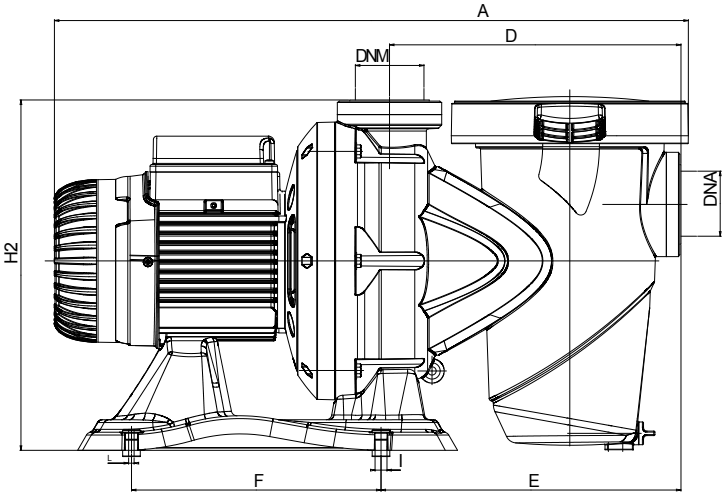

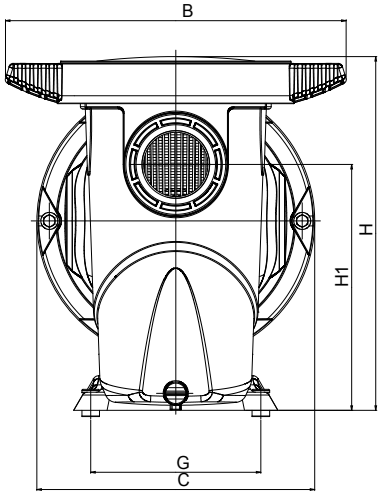

Dimensions in mm							Pump connection
1	A	559	H1	222			
2	B	300	H2	314			Suction
3	C	245	I	11			2 " G
4	D	257	L	6.5			2,5 bar (250 kPa)
5	DNA	G2"					
6	DNM	G2"					Discharge
7	E	265					2 " G
8	F	220					2,5 bar (250 kPa)
9	G	150					
10	H	317					

Project	Project ID	Created by	Created on
			24/03/2016

DAB PUMPS reserves the right to make modifications without notice